Panasonic

Building Passion,
Building Solutions.
Panasonic Air Conditioning Systems

We face a time in which "quality air" differentiates business. It's a time for Panasonic to fully display its strengths. Our ability to assemble and build superior systems isn't just due to the rich resources we have as a comprehensive electronics manufacturer, but also to Panasonic's 100 years of tradition, where each person thinks and acts on their own initiative while working in a team to reach further heights. We do not compromise. Each of our independent selves is a one stop solution. We face our customers' challenges together with our customers and do all that we can to build effective systems. As a true partner for our customers, we strive to always be at the forefront of business.

- Please read the Installation Instructions carefully before installing the unit, and the Operating Instructions before using it.
- Specifications are subject to change without prior notice.
- The contents of this catalogue are accurate as of January 2020.
- Due to printing considerations, the actual colours may vary slightly from those shown.
- All graphics are provided merely for the purpose of illustrating a point.

Do not add or replace refrigerant other than the specified type. Manufacturer is not responsible for the damage and deterioration in safety due to usage of other refrigerant.

Authorised Dealer

PAC NONINVERTER ASIA January 2020

Panasonic Global Air Conditioner
Global Site : aircon.panasonic.com
PROClub : panasonicproclub.global
airconpanasonicglobal

Panasonic
BUSINESS

SINGLE-SPLIT PACKAGED AIR CONDITIONERS 2021/2022








NON-INVERTER nanoeX R32 REFRIGERANT R410A

A Better Life, A Better World

QUALITY AIR FOR LIFE

Making Social Spaces Comfortable and Enjoyable

Panasonic packaged air conditioners incorporate the unique nanoe™ technology as a standard feature. This technology helps deodorise and inhibit bacteria and viruses to improve the quality of the room air. In addition, the fast cooling system powered by the high-performance turbo fan combined with the exceptional energy effeciency of the R32 refrigerant makes it environmentally friendly. Panasonic helps transform cafes, restaurants, gyms and any place where people gather into a richer and friendlier environment.

CONTENTS

Introduction 2-3
Model Line-Up 4-5

Feature Highlight
nanoe™ TECHNOLOGY NEW ... 6-13
Fast Cooling NEW 14-15
R32 Outdoor Units NEW ... 16-17
Remote Controller 18-19

Specifications
4-Way Cassette NEW 20-21

Outdoor Units
Dimensions NEW 22-23

NEW

nanoeX™

- Standard Equipped nanoe™ Technology
- Effective on Adhered Pollutants
- 24hrs Quality Air

nanoe™ X suppresses unpleasant odours and inhibits bacteria and viruses.

NEW

Fast Cooling

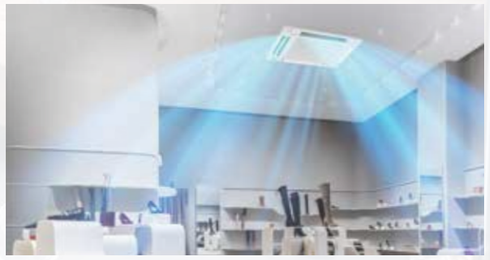

The advances in design and technology allow powerful and fast cooling.

NEW

Next Generation R32 Refrigerant

Operating on lower GWP R32 refrigerant, the new series of outdoor units are environmentally friendly.

MODEL LINE-UP

Panasonic packaged air conditioners are the ideal air conditioning solution for offices, restaurants, retail stores and gyms.

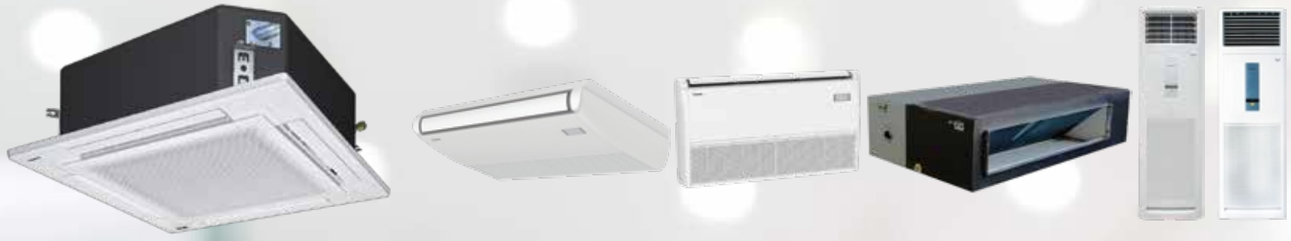

NEW

4-WAY CASSETTE

The 4-way direction airflow released through four flaps provides wide and even cooling.

nanoeX

	18,500	25,000	30,000	36,000	42,000	48,500
4-WAY CASSETTE P.16-17 NEW nanoeX	S-19PU1H5B	S-25PU1H5B	S-30PU1H5B	S-36PU1H5B	S-42PU1H5B	S-50PU1H5B
CEILING & CONSOLE P.18-19	S-18PTB1H5	S-24PTB1H5	S-30PTB1H5	S-36PTB1H5	S-48PTB1H5	S-60PTB1H5
DUCTED P.20-21	S-18PFB1H5	S-24PFB1H5	S-30PFB1H5	S-36PFB1H5	S-48PFB1H5	S-60PFB1H5
FLOOR STANDING P.22-23	CS-C18FFH	CS-C28FFH			CS-C45FFH	
OUTDOOR UNITS P.18-19 NEW R32 REFRIGERANT Blue Fin Condenser	U-19PN1H5	U-25PN1H5	U-30PN1H5 U-30PN1H8	U-36PN1H8	U-42PN1H8	U-50PN1H8
OUTDOOR UNITS CEILING & CONSOLE / DUCTED P.24-25	U-18PVB1H5	U-24PVB1H5	U-30PVB1H5	U-36PVB1H8	U-48PVB1H8	U-60PVB1H8
OUTDOOR UNITS MINI CASSETTE / FLOOR STANDING P.26-27	CU-PC18DB4H (Mini Cassette) CU-C18FFH (Floor Standing)	CU-PC24DB4H (Mini Cassette)	CU-C28FFH* (Floor Standing)			CU-C45FFH* (Floor Standing)

Next Generation R32 Refrigerant

R32 REFRIGERANT

Panasonic recommends R32 because it is comparably environmentally friendly. Compared to R22 and R410A, R32 has a very low potential impact on the depletion of the ozone layer and global warming.

1 Installation innovation

- Extremely easy to install, practically the same as R410A.
  (Just remember to verify that the pressure gauge and vacuum pump are compatible with R32)
- This refrigerant is 100% pure, which makes it easier to recycle and reuse.

2 Environmental innovation

- Zero impact on the ozone layer
- 75% less impact on global warming

3 Economic and energy consumption innovation

- Lower cost and greater savings
- Higher energy efficiency than R410A

nanoe™ TECHNOLOGY NEW

Standard Equipped nanoe™ Technology

- nanoe™ X, charged water particles, contain hydroxyl (OH) radicals that work to provide quality air.
- The electrodes of nanoe™ X devices are made of titanium.
- No need to clean or replace the device (maintenance free).
- Only 2.5 Wh energy consumption.

nanoe™ X module

Unique nanoe™ X module casing releases 4.8 trillion OH radicals per second.

nanoe™ X generator

Made in JAPAN

Craftsmanship in Japan enables the adoption of titanium

Electrodes of nanoe™ X devices are produced with the support of craftsmen in Japan that has advanced expertise on processing ultra-small parts of titanium glass frames although titanium is very strong material and difficult to process.

nanoeX™

Panasonic's unique nanoe™ X has an outstanding effect on a wide range of air pollutants. It deodorises odours, inhibits bacteria & viruses, mould, allergens, pollen and hazardous substances, and it also moisturises the entire room and leads to smooth your skin and hair. nanoe™ X improves the indoor air quality.

7 effects of nanoe™ X

- **Deodorises**: Odours
- **Inhibits 5 types of pollutants**: Bacteria & viruses, Mould, Allergens, Pollen, Hazardous substances
- **Moisturises**: Skin & Hair

For more information on 7 effects of nanoe™ X, please refer to page 13.
For further details and validation data, please refer to the following website:
https://aircon.panasonic.com/introducing/whats_nanoe/nanoe.html

Effective on Adhered Pollutants

- nanoe™ X penetrates deep into fabrics and deodorises, inhibits bacteria, viruses, mould, allergens, pollen and hazardous substances.
- nanoe™ X extensively spread out through the room to inhibit adhered pollutants adhering to surfaces, while air filters only collect airborne dust but adhered substances.

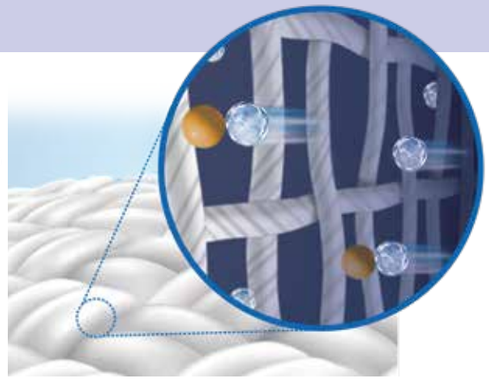

Curtain

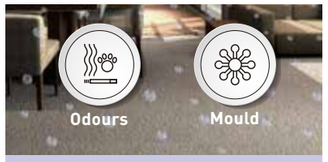

Carpet

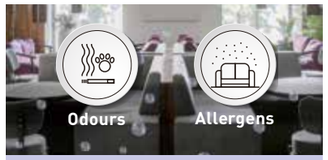

Sofa

24hrs Quality Air

- nanoe™ X functions in cooling as well as fan mode after business hours.
- Cleans indoor air even when the space is not in use.
- No need to consume excessive electricity to clean the air.

Business Hours •Simulated image

nanoe ON, Cooling ON (Cooling Mode)

nanoe™ X cleans indoor air while maintaining a comfortable temperature when people are present.

24hr FRESH & CLEAN

After Business Hours •Simulated image

nanoe ON, Cooling OFF (Fan Mode)

After business hours, nanoe™ X keeps cleaning indoor air in fan mode.

nanoe™ X effectiveness proven in large space 802m³

A third-party certification organization SIRIM Berhad (SIRIM)*1, conducted the performance experiment using a 4-Way Cassette equipped with a nanoe™ X device to inhibit hexadecane, a chemical contained in PM2.5.

SIRIM

*1 SIRIM is a premier industrial research and technology organisation in Malaysia, a wholly-owned company of the Malaysian Government under the Ministry of International Trade and Industry (MITI).
*2 Hexadecane is a hazardous substance contained in gasoline and diesel exhaust gas.

Hexadecane Inhibition Ratio

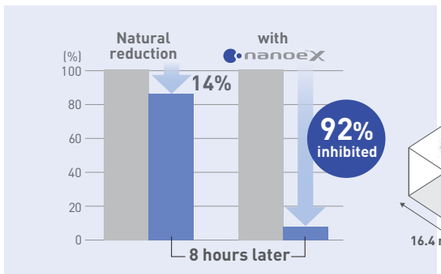

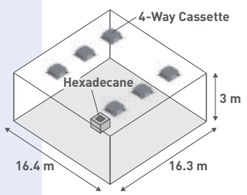

Tested Product: 4-Way Cassette x 6 units, Area: Approx. 802m³ (Approx. 16.4m × 16.3m × 3m), Hazardous Substance: Hexadecane*2, Test Conditions: 8-hour exposure with 4-Way Cassette (Fan mode and nanoe™ X functionality), Test Result: nanoe™ X turned ON=hexadecane inhibition avg. 92%, nanoe™ X turned OFF=hexadecane inhibition avg. 14%

nanoe™ TECHNOLOGY NEW

How nanoe™ X works

Generation Mechanism

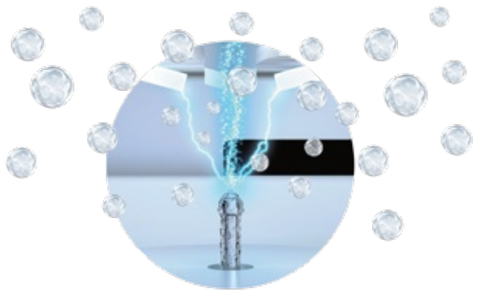

Multi-Leader

The nanoe™ X device uses a "multi-leader discharge" system that discharges 10 times more OH radicals than nanoe™ through a counter electrode with 4 discharging bars for better performance.

Structure

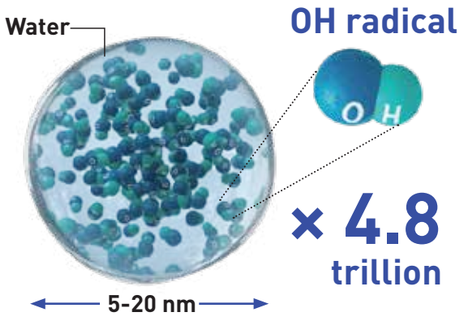

nanoe™ X is nano-sized charged water particles. nanoe™ X device generates 4.8 trillion OH radicals per second that spread out extensively.

Inhibit Bacteria

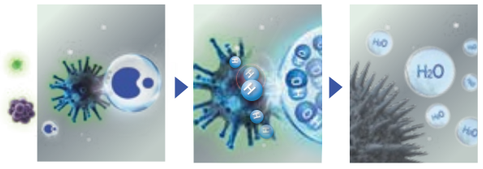

nanoe™ X reaches bacteria.

OH radicals take away the hydrogen from bacteria.

OH radicals transform hydrogen in bacteria to water and inhibit bacterial activity.

Deodorize

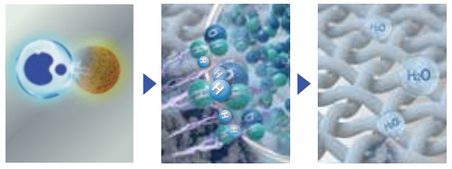

nanoe™ X reaches odour in fabric.

OH radicals break down odour-causing substances.

Deodorises smell in fabric.

Expanding the nanoe™ world in Japan – 24/7, anytime, anywhere

Increasingly adopted in a wide range of industries, such as railway, automotive, hotel, and hospital industries.

Public transport

JR East
Yamanote line: Adopted for new railcar models

JR Kyushu
Cruise trains: Adopted for the Seven Stars in Kyushu

KEIHAN
Keihan Main Line: Adopted for admission-paid special railcars

KEIO
Keio Line: Adopted for new railcar models

Office

• 4-way cassette air conditioners

HITACHI
• Elevators

Home

• Humidifying air purifiers

• Air conditioners

• Humidifiers

• Clothes drying dehumidifiers

• Fans

Automobile

TOYOTA — Expanding adoption to **39** models (As of October, 2019)
LEXUS

SUZUKI — adopted for **3** models

Adopted as optional accessary — SUBARU CORPORATION.

Public space

Ceiling embedded type nanoe™ generator "air-e"

• Hotels

Hiroshima Washington Hotel

Parkside Hotel

• Cafes

Cafe Doll

• Hospitals

Sakana Mach Hospital

• Nursery schools

Ayumi Nursery School

• Nursing homes

Samukawa Nursing Home

Panasonic is committed to the improvement of air quality with nanoe™ Technology.

Trade names, trademarks and images of products/services are used in this material under approval by relevant entities in Japan. (As of June 1st, 2018)

Worldwide nanoe™ Technology certificates

nanoe™ Technology has been validated in Singapore, Vietnam, Malaysia, Indonesia and Philippines.

Singapore

Vietnam

Malaysia

Indonesia

Philippines

Verification of nanoe™ has been carried out in collaboration with research institute

Bacteria & viruses

Virus infectivity for the four kinds of viruses was reduced by 99% in 6 hours

Viruses, either human- or animal-derived, are generally segmented into 4 types.
The effectiveness of nanoe™ technology in inhibiting these 4 types has been verified by the virus clearance test.
It is thought that nanoe™ technology has the potential to significantly inhibit most highly resistant and unknown viruses.

For further information, please see below.

Test outline

The test was conducted in collaboration with Charles River Biopharmaceutical Services GmbH, which is a research laboratory that meets German GLP (Good Laboratory Practice).

The test is designed to predict the suppression effect against highly resistant and unknown viruses. In light of the high likelihood of new viruses being discovered and becoming widespread, we segmented the viruses following segmentation criteria (presence of envelope, genome, and size) based upon a virus clearance test.
Four types of viruses that meet these criteria, viruses that are segmented based on their physiochemical resistance, were selected. .A comparison of nanoe exposure and non-exposure for these four viruses selected based on the virus clearance test guidelines was carried out in testing according to GLP standards.

Testing organisation

Charles River Biopharmaceutical Services GmbH **[Germany]**

A facility of the Charles River Laboratories Group, a global company that supports drug development from the pre-clinical to post-market stages as a subcontractor entrusted with the breeding/supply of high-quality laboratory animals and various safety tests.

[GLP (Good Laboratory Practice):Standards to show that testing was carried out accurately and properly, with strict provisions for testing procedures, etc.]

Test period | September-November 2011

Test subjects | Xenotropic murine leukemia virus
Encephalomyocarditis virus
Pseudororabies virus
Porcine parvovirus

Test method | Test space volume: 45L box
Exposure time: 3hours, 6hours
Exposure distance: 15 cm

Characteristics of viruses selected based on the "Virus Clearance Test Guideline"

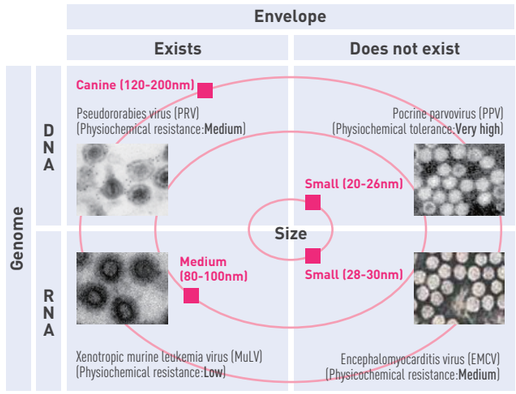

Verification tests for nanoe™ X effects in large spaces

odours

The nanoe™ X reduced the odours adhering to fibres such as curtains and carpets (25m²)

3rd party

Cigarette smoke odour

Results
By sending nanoe™ X, compared with natural reduction, 2 hours later there was an odour intensity reduction of approximately 1.0.

Testing organization
Panasonic Product Analysis Center, Japan
(Report No.4AA33-170203-A01)

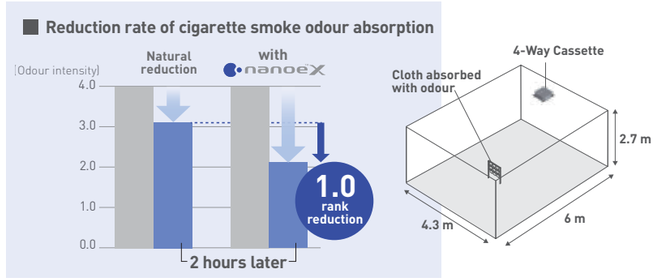

Tested Product: 4-way ceiling cassette type equipped with nanoe™ X, Test method: (1) Approx. 25m²: A unit was installed inside the test chamber (approx. 6.02m x 4.23m x 2.66m), (2) A predetermined number of pieces of cloth (gauze) were hung in an approximately 1m³ box, and 20 cigarettes were lit and left for five minutes. (3) The pieces of cloth absorbed with the cigarette smoke odour were placed at a height of less than 1.2m approximately 1.5m apart from the air conditioning outlet and tested with a blast operation. (4) The prototype was operated, and the pieces of cloth absorbed with the odour were collected after a predetermined period, and a sensory evaluation was implemented (6-stage odour intensity indication method.) N = 8 subjects, Target odour: Cigarette smell

odours

The nanoe™ X reduced the odours adhering to fibres such as curtains and carpets (48m²)

3rd party

Cigarette smoke odour

Results
Compared to natural reduction, the nanoe™ X blast reduced the odour intensity by more than approximately 0.7 after two hours.

Testing organization
Gunma Analysis Center, Japan
(Report No.27055)

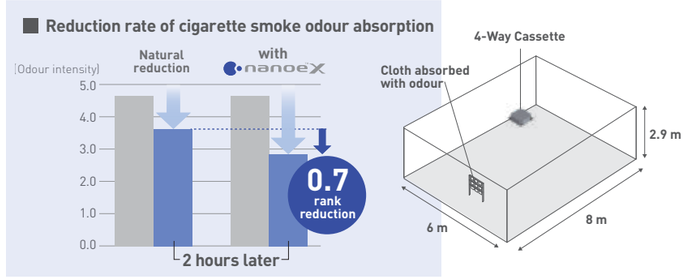

Tested Product: CS-P63U4 (4-way ceiling cassette type), Test method: (1) Approx. 48m²: Prototype installed in testing laboratory (6m x 8m x 2.9m), (2) A predetermined number of pieces of cloth (gauze) were hung in an approximately 1m³ box, and removed after lighting five cigarettes and leaving them for an hour. (3) The pieces of cloth absorbed with the cigarette smoke odour were placed at a height of less than 3m in front of the 48m² space and the blast was turned on. (4) After the experiment, the pieces of cloth were transported to a third-party organization, and a sensory evaluation was conducted with the odour intensity indication method. N = 8 subjects, Target odour: Cigarette smell

odours

Even in large areas nanoe™ X reduced odours adhering to fibres such as curtains and carpets (139m²)

3rd party

Cigarette smoke odour

Results
Compared to natural reduction, the nanoe™ X blast reduced the odour intensity by more than approximately 0.4 after two hours.

Testing organization
Kaken Test Center, Japan
(Report KT-19-015089-1)

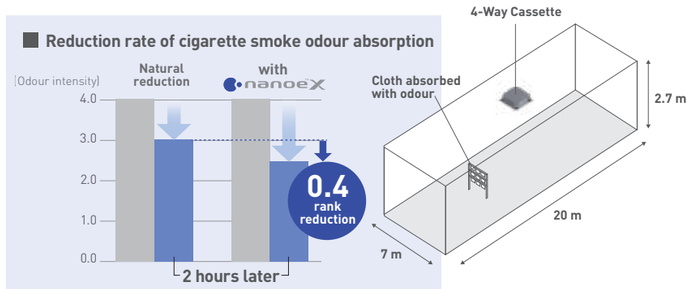

Tested Product: CS-P160U6 (4-way ceiling cassette type equipped with nanoe™ X) Test method: (1) Approx. 139m²: Unit installed in old office (approx. 7m x approx. 20m x 2.7m), (2) A predetermined number of pieces of cloth (gauze) were hung in an approximately 1m³ box, and removed after lighting five cigarettes and leaving them for an hour. (3) The pieces of cloth absorbed with the cigarette smoke odour were placed at a height of less than 1m approximately 3m apart from the air conditioning outlet and tested with a blast operation. (4) After the experiment, a sensory evaluation was conducted with the odour intensity indication method. N = 9 subjects, Target odour: Cigarette smell

nanoe™ TECHNOLOGY

Hazardous substances

nanoe™ X effectiveness proven in large space(802m³)

3rd party

A third-party certification organization SIRIM Berhad (SIRIM)*1, conducted the performance experiment using a 4-Way Cassette equipped with a nanoe™ X device to inhibit hexadecane, a chemical contained in PM2.5.

SIRIM

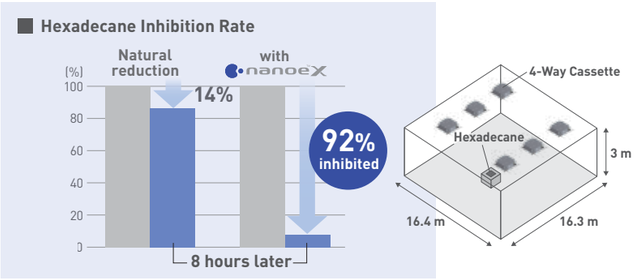

*1 SIRIM is a premier industrial research and technology organisation in Malaysia, a wholly-owned company of the Malaysian Government under the Ministry of International Trade and Industry (MITI).
*2 Hexadecane is a hazardous substance contained in gasoline and diesel exhaust gas.

Tested Product: 4-Way Cassette x 6 units, Area: Approx. 802m³ (Approx. 16.4m × 16.3m × 3m), Hazardous Substance: Hexadecane*2, Test Conditions: 8-hour exposure with 4-Way Cassette (Fan mode and nanoe™ X functionality), Test Result: nanoe™ X turned ON=hexadecane inhibition avg. 92%, nanoe™ X turned OFF=hexadecane inhibition avg. 14%

odours

The reading of the room odour sensor was reduced with the air conditioner equipped with nanoe™ X that was installed in the actual space (47m²)

In-house

Room odour reduction effects

Results
Compared to when the nanoe™ X was not operated, there was a tendency for the room's odour sensor reading to decrease when it was operated.

About the room odour (sensation)
In regards to how the odour felt, the distinct odour of the room could be felt when entering the room when the nanoe™ X was not operated, but it was not felt when the nanoe™ X was operated.

Content
When the nanoe™ X was operated, the effect to reduce the odours arising from the room could be expected.

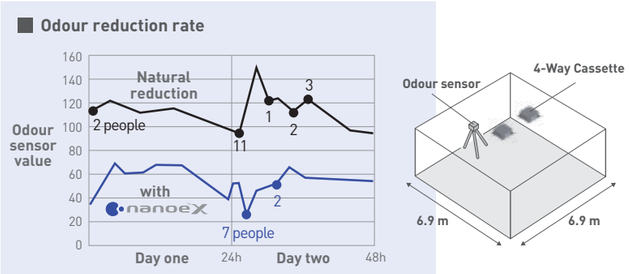

Tested Product: CS-P45U4B (4-way ceiling cassette type equipped with nanoe™ X) x 2 units Evaluation: October 8, 2019, to October 17, 2019 (1) Tested using the units installed in an approximately 47m² conference room Gunma Factory in Japan. (2) Air conditioner settings Operation mode: Air conditioning, Preset temperature: 27°C, Wind direction: Horizontal, Wind speed: Medium wind speed (3) During the first week, the nanoe™ X was operated, and during the second week, the nanoe™ X was stopped and the air conditioner was operated, and the odour intensity was measured for two days each with the New Cosmos Electric odour sensor (XP-329m) (4) The air conditioner was operated for 24 hours and tested. Target odour: Room odour

nanoe™ X is recognized by experts

Osaka Prefecture University

PROFESSOR MASAFUMI MUKAMOTO

Graduate School of Life and Environmental Sciences, Osaka Prefecture University

"I recommend that equipment incorporating nanoe™ X Technology be placed in buildings where cleanliness is required, such as in schools, childcare facilities and medical institutions."

Azabu University

PROFESSOR MASAHIRO SAKAGUCHI

Laboratory of Veterinary Microbiology I, School of Veterinary Medicine, Azabu University

"As nanoe™ X is effective in inhibiting invisible allergens, we can expect it to help create a comfortable environment."

nanoeX Technical Explanation

←Not a result of experiments in actual use environments→

Effect 1 Odours

←Cigarette smoke odour→[Testing organisation] Panasonic Product Analysis Center [Testing method] Verified using the six-level odour intensity scale method in an approximately 23m³ sized test room[Deodorisation method] nanoe™ released [Test substance] Surface-attached cigarette smoke odour [Test result] Odour intensity reduced by 1.2 levels in 2 hours (BAA33-130125-D01)

Effect 2 Bacteria & Virus

←Airborne bacteria (Staphylococcus aureus)→[Testing organisation] Kitasato Research Center for Environmental Science [Testing method] The number of bacteria is measured after direct exposure in an approximately 25m³ sized airtight test room [Inhibition method] nanoe™ released [Test substance] Airborne bacteria
[Test result] Inhibited by at least 99.7% in 4 hours (24_0301_1)

←Adhered bacteria (O157)→[Testing organisation] Japan Food Research Laboratories [Testing method] Measured the number of bacteria adhered to a cloth in an approximately 45L sized airtight test room [Inhibition method] nanoe™ released [Test substance] Adhered bacteria [Test result] Inhibited by at least 99.99% in 1 hour (208120880_001)

←Airborne virus (bacteriophage Øx174)→[Testing organisation] Kitasato Research Center for Environmental Science [Testing method] The number of virus is measured after direct exposure in an approximately 25m³ sized airtight test room [Inhibition method] nanoe™ released [Test substance] Airborne virus [Test result] Inhibited by at least 99.7% in 6 hours (24_0300_1)

←Adhered virus (Influenza virus H1N1 subtype)→[Testing organisation] Kitasato Research Center for Environmental Science [Testing method] Measured the number of virus adhered to a cloth in an approximately 1m³ sized airtight test room [Inhibition method] nanoe™ released [Test substance] Adhered virus [Test result] Inhibited by at least 99.9% in 2 hours (21_0084_1)

Effect 3 Mould

←Airborne mould→[Testing organisation] Japan Food Research Laboratories [Testing method] Measured the number of mould altered in an approximately 23m³ sized test room [Inhibition method] nanoe™ released [Test substance] Airborne mould [Test result] Inhibited by at least 99% in 1 hour (205061541-001)

←Adhered mould→[Testing organisation] Japan Food Research Laboratories [Testing method] Measured mould adhered to a cloth [Inhibition method] nanoe™ released [Test substance] Adhered mould [Test result] Inhibited by at least 99.5% in 8 hours (11038081001-02)

Effect 4 Allergen

←Dog-derived allergens and cat-derived allergens→[Testing organisation] Institute of Tokyo Environmental Allergens [Testing method] Direct exposure in a 45L airtight container and measured using the ELISA method [Inhibition method] nanoe™ released [Test substance] dog derived allergens, cat derived allergens

[Test result]
←Dog (dander)→Inhibited by at least 99% in 1 hour (11M-RPTAPR047_1)
←Cat (dander)→Inhibited by at least 98% in 2 hours (11M-RPTAPR051_1)

Effect 5 Pollen

← Cedar→[Testing organisation] Panasonic Product Analysis Center [Testing method] Measured allergen attached to a cloth, using the ELISA method, in an approximately 23m³ sized test room [Inhibition method] nanoe™ released [Test substance] Cedar pollen [Test result] Inhibited by at least 88% in 8 hours (BAA33-130304-F01)

Effect 6 Hazardous substances

[Testing organisation] Panasonic Product Analysis Center [Testing method] Measured the amount of attached organic substances in an approximately 23m³ sized test room [Inhibition method] nanoe™ released

[Test result]
←Aromatic carboxylic acid (benzoic acid)→Broken down at least 99% in approximately 16 hours (Y13NF135)
←Paraffin (hexadecane)→Broken down at least 99% in approximately 24 hours (Y13NF136)

Effect 7 Skin & Hair

←Skin→[Testing organisation] Panasonic Product Analysis Center [Testing method & test result] Approximately 34m³ sized test room, room temperature 23 degrees Celsius, humidity 30%, 8 women aged 30~49 with varying skin conditions ranging from being averagely moist to dry, the stratum corneum water content was measured before and after resting for 90 minutes being exposed to a nanoe™ generating device, to find the average value of the change. (D01-071219F-01)

←Hair→[Testing organisation] Panasonic Product Analysis Center [Testing method and test result] Approximately 46m³ sized test room, room temperature 25 degrees Celsius, humidity 40%. Bundles (6 bundles) of hair were suspended 2m from a nanoe™ generating device, with repeated operation of the nanoe™ generating device: 8 hours on and 16 hours off. (D01-091005-01TM) [Method] nanoe™ released [Test substance] Hair

Fast Cooling NEW

Industry-leading Powerful Airflow

The Turbo Fan with Twisted 3D Blades provides a large and powerful airflow to cool every corner of the room.

Average **30.7** m³/min

Capacity Class (k Btu/h)	18.5	25.0	30.0	36.0	42.0	48.5
Airflow Volume (m³/min)	25.0	25.0	25.0	36.4	36.4	36.4

Twisted 3D Blade Turbo Fan

Conventional*

Ø490

NEW Model

Ø485 Twisted 3D Blade

Airflow 10%UP under the same sound pressure level.

*Comparison between CS-D**DB4H5 models.

360° Wide & Comfortable Airflow

Air from the center is sent farther and the air blown out of the wide side flaps spreads throughout the room. The air comes from all four sides of the unit and expands gently in a circle centered on the indoor unit.

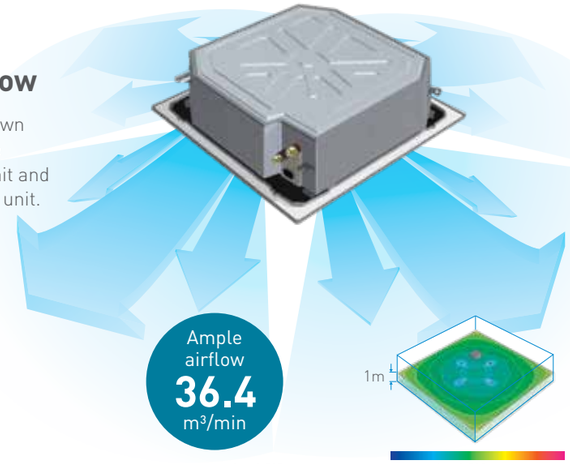

• Industry-leading in the 36/42/50PU class

• 4-Way 36/42/50PU type

Wide Flap

Long Airflow

Adding a sub flap and widening the main flap have reduced turbulence and increased airflow. Also, the wider angle jetting port allows the airflow to reach as far as five meters.

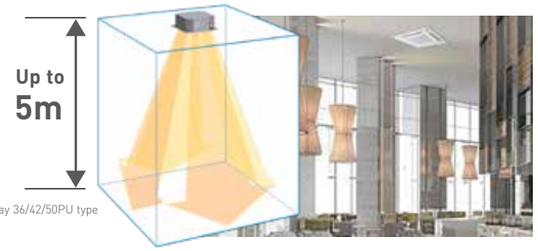

• 4-Way 36/42/50PU type

Large Flap and Sub Flap

Conventional*

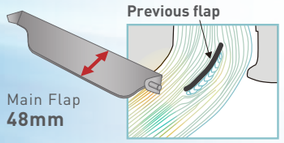

As the airflow becomes more turbulent, the airflow velocity is decreased.

NEW Model

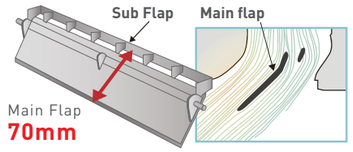

As the airflow becomes less turbulent, the airflow velocity is increased.

*Comparison between CS-D**DB4H5 models.

Quality

Equipped with double insulation

To prevent dew condensation in humid conditions, the indoor unit of Panasonic packaged air conditioners has both inside and outside heat insulators.

Outside Inside

No dew condensation

Installation

A strong and quiet drain pump

The drain pump can pump water up to a height of 850mm, making drain pipe layout easy.

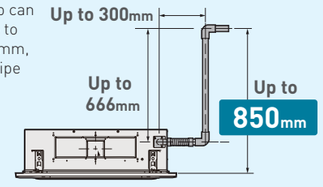

Easy installation design

For easier installation, the design allows space to use tools without damaging the interior. Also, by improving the bracket's shape into a V-shape, it is easier to hook the anchor bolts.

Too narrow to use the tool Easy to use the tool

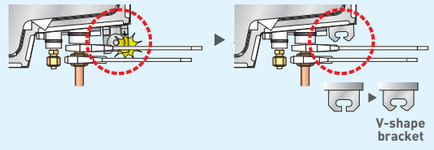

R32 Outdoor Units NEW

More Efficient, Less Space

While maintaining its strong power, higher energy efficiency of R32, coupled with Panasonic's technology, the ingenious design allows for a more compact outdoor unit that fits into any apace and layout.

Can be installed in the limited space

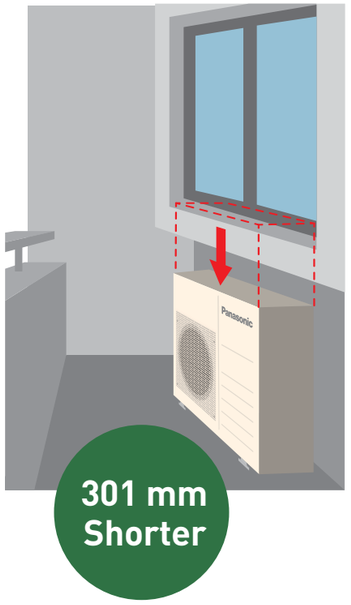

30–36k Btu/h Model

U-30PN1H5 / U-30PN1H8 / U-36PN1H8

Conventional Model
U-40PV1H8 H996 × W980 × D370

New Model

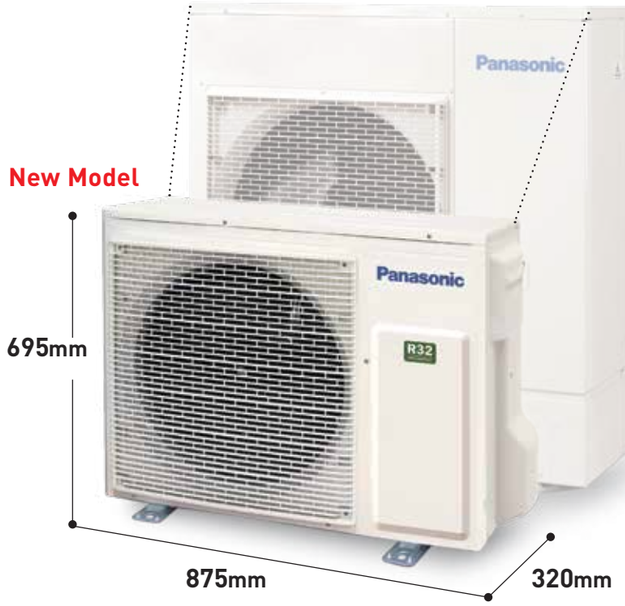

Height	996 mm	695 mm*	301 mm Shorter
Weight	86 kg	56 kg	30 kg Lighter

*Comparison between U-40PV1H8 and U-36PN1H8.

High Efficiency

R32 refrigerant yields higher energy efficiency than R410A.The Coefficient of Performance (COP) has been greatly improved to reduce power consumption.

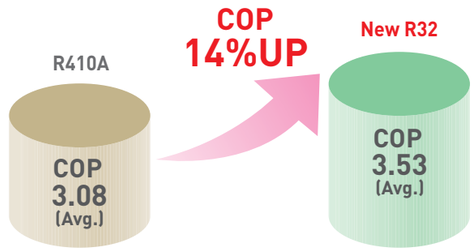

Quality

In-house manufactured compressor

Panasonic all in-house manufactured compressors are supplied to the world. The cumulative total of high-quality compressors in use has reached 580 million units*.

*As of September 2019. (In-house research)

High durability outdoor unit

Corrosion-resistance treated for high resistance to rust and salty air to assure long-lasting performance.

Blue Fin Condenser

Installation

Long piping

The maximum chargeless piping length is 7.5m, but it can be extended up to 50m with additional gas charging for greater installation flexibility.

Piping length

BTU	19-25k	30-36k	42-50k
Max. Pipe Length	30 m	45 m	50 m
Max. Chargeless Length #	7.5 m	7.5 m	7.5 m
Max. Height Difference	20 m	30 m	30 m

Additional gas is required when pipe length is extended.

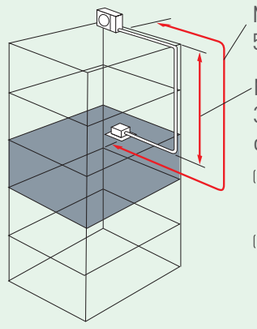

Max.(*1) 50m Pipe length

Max.(*2) 30m Height difference

(*1) Supports for
U-42PN1H8
U-50PN1H8

(*2) Supports for
U-30PN1H5
U-30PN1H8
U-36PN1H8
U-42PN1H8
U-50PN1H8

Maintenance

Service maintenance

The PCB inside the outdoor unit has been removed, allowing easy installation and service maintenance.

Supports for
U-19PN1H5
U-25PN1H5
U-30PN1H5

•Single phase only.

Removed PCB to avoid interference

Remote Controller

Precise Control, Easy Comfort

Panasonic Single-split Packaged Air Conditioner Remote Controllers are designed with user convenience in mind. Multiple settings are available so airflow and air quality can be regulated according to preferences. Users can also opt for a wired remote controller equipped with a high-performance timer.

Wireless Remote Controller / Receiver

*A wireless remote controller / receiver is in the same package with the indoor unit.

Wired Remote Controller

CZ-RD513C (Optional)

Settings can be regulated with 3 control options:

Group Control by a Single Wired Remote Controller

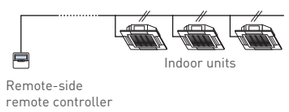

- All indoor units operate in the same mode.

Separate Control by Twin Wired Remote Controllers

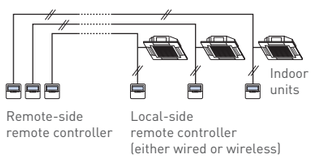

- Each indoor unit can be operated by either of the two wired remote controllers.
- Apart from the timer setting time, the displays for the two wired remote controllers are identical.
- The last button pressed has priority (The main or slave attribute is set with the wired remote controller).

Common Control by Both Wired and Wireless Remote Controllers

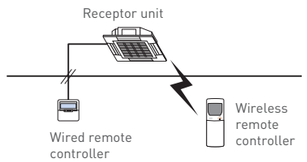

- The last button pressed has priority (using either wired or wireless remote controllers).

Weekly Timer

1.Timer can be set for each day of the week.
2.Can be pre-set with: •Max. 6 settings/day •42 settings/week.
3.The temperature can also be programmed for optimal comfort.

Can be set to accommodate different conditions

Businesses with regular off days

Example:
Saturday afternoon – CLOSED
Sunday - CLOSED

Mon-Fri	On 9:00, Off 18:00
Sat	On 9:00, Off 12:00
Sun	Not set

▶ Timer settings can be different every day of the week.

Businesses with varying visitor flows at different timings

Example:
Lunchtime - More visitors, lower temperature

Daily Settings		
	On 12:00	23°C
	On 14:00	28°C

▶ Timing & temperature can be set simultaneously.

Can be set to switch off automatically

Example:
Avoid power wastage even if users forget to turn it off (weekdays)

Mon-Fri	
	Off 20:00

▶ Timer can be set for simple shut-off operation.

Setting the timer

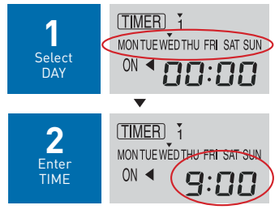

*Simple Timer Mode
Using the 24-Hour ON/OFF timer, ON/OFF operations can be set at the same time daily.

Odour Wash*

Reduces unpleasant odours caused by the air conditioner's heat exchanger.

Odour Removing ONE PUSH

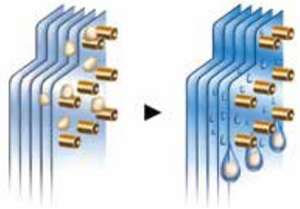

When air from the outlet smells musty, moisture in the heat exchanger washes away odours.

*Can be operated with the wired remote controller.

Economy Mode*1

Saves up to 20%*2 energy. The air conditioner determines the stable condition and moderately shifts the set temperature in 0.5-degree increments to regulate the energy-saving operation (max. 2 degrees).

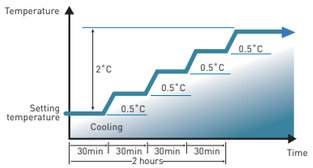

*1 Can be operated with the wired remote controller.

*2 During operating in the cooling mode at the remote control set temperature of 25 under the cooling standard temperature conditions.

Ventilation

When an external device such as a ventilator is connected to the indoor unit, the ventilator's ON/OFF operations can be controlled by the wired remote controller. You can select from either link-ventilation or independent-ventilation.

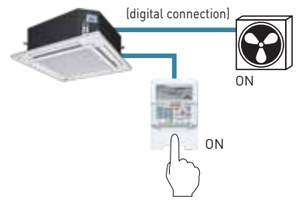

Ventilators are not included in the product line-up.
OPTIONAL : Printed circuit board (Interface Adapter for External Signals CZ-TA31P*) is needed.

*Printed Circuit Board CZ-TA31P

- By connecting to the indoor unit, a separately sold ventilator can be controlled.
- Remote operation control of the indoor unit is enabled (ON/OFF control).
- The condition of the indoor unit (malfunctions, operating status) can be output externally.
- Control in linkage to a total heat exchanger or similar devices is possible.

Multi Comfort Air Control

Panasonic control technology gives users a wide selection of more specific airflow angles. Choose from the 3-Pattern Auto Swings to avoid direct exposure to cool air (total 50-degree swing width).

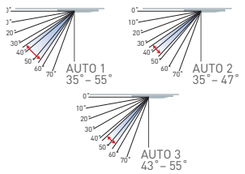

Central Control Adaptor

Using Central Control Adaptor along with the existing VRF units, a centralized control system is possible. Temperature management can be achieved by expanding low-to-mid sizes together.

CZ-CAPRA1+CZ-CCERA1
H120×W70×D32.5mm

Even buildings with additional air conditioning systems can be central controlled

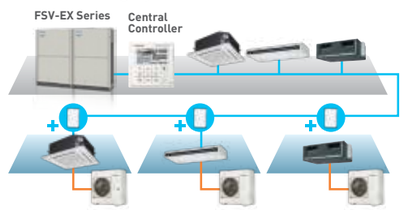

4-WAY CASSETTE NEW

nanoe™ X

Model No.

S-19PU1H5B
S-25PU1H5B
S-30PU1H5B
S-36PU1H5B
S-42PU1H5B
S-50PU1H5B

R32 REFRIGERANT

TECHNICAL FOCUS

- nanoe™ X equipped as standard
- Compact design
- Low sound levels
- DC fan motor for increased efficiency
- Powerful drain pump gives 850 mm lift
- Lightweight design

Accessories

Panel

CZ-KPU3H

Selectable Remote Controller

*A wireless remote controller is in the same package with the indoor unit.

CZ-RD513C (Optional)

Dimensions

Ⓐ (S-19PU1H5B / S-25PU1H5B / S-30PU1H5B)
Ⓑ (S-36PU1H5B / S-42PU1H5B / S-50PU1H5B)

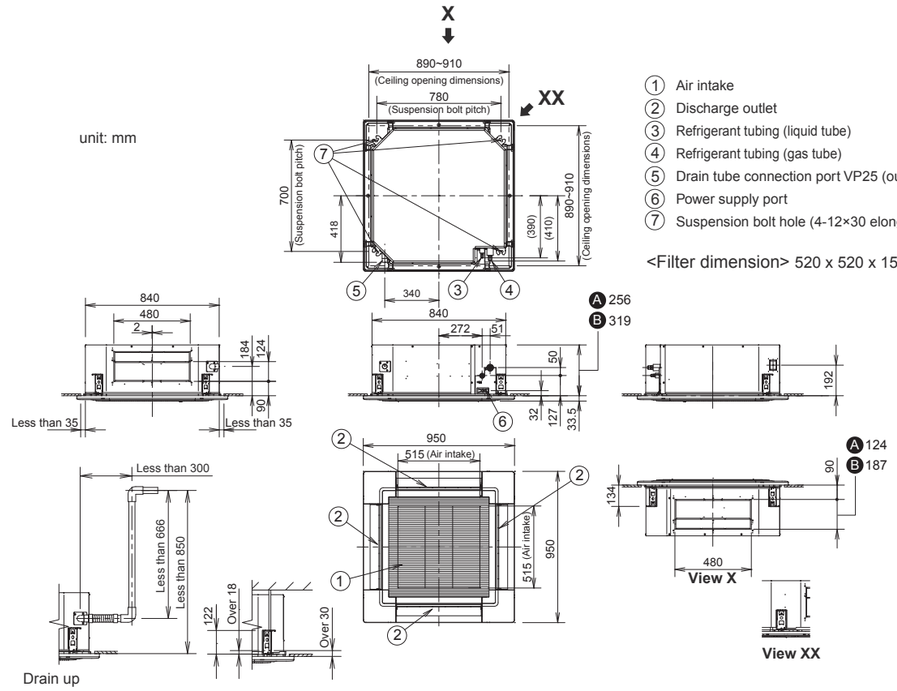

1. Air intake
2. Discharge outlet
3. Refrigerant tubing (liquid tube)
4. Refrigerant tubing (gas tube)
5. Drain tube connection port VP25 (outer dia. ø32)
6. Power supply port
7. Suspension bolt hole (4-12×30 elongated hole)

<Filter dimension> 520 x 520 x 15

* Adjust the suspension bolt length so that the gap from the lower ceiling surface becomes 30 mm or more (18 mm or more from the lower surface of the body) as shown in the figure. When the suspension bolt length is long, it hits the ceiling panel and installation is not possible.

Capacity (Btu/h)			18,500	25,000	30,000	30,000	36,000	42,000	48,500
Power Source		V/Phase Hz	220-240 V, 1Ø Phase - 50 Hz			380-415 V, 3Ø Phase - 50 Hz			
Indoor			S-19PU1H5B	S-25PU1H5B	S-30PU1H5B	S-30PU1H5B	S-36PU1H5B	S-42PU1H5B	S-50PU1H5B
Outdoor			U-19PN1H5	U-25PN1H5	U-30PN1H5	U-30PN1H8	U-36PN1H8	U-42PN1H8	U-50PN1H8
Panel			CZ-KPU3H	CZ-KPU3H	CZ-KPU3H	CZ-KPU3H	CZ-KPU3H	CZ-KPU3H	CZ-KPU3H
Cooling Capacity: Rated		kW	5.42	7.33	8.79	8.79	10.55	12.31	14.21
		Btu/h	18,500	25,000	30,000	30,000	36,000	42,000	48,500
Current		A	7.1-6.5	9.6-8.8	13.5-13.2	4.5-4.3	4.9-4.6	5.4-5.3	7.4-7.6
Power Input: Rated		kW	1.52	2.07	2.85	2.57	2.83	3.10	4.14
COP/EER		W/W	3.57	3.54	3.08	3.42	3.73	3.97	3.43
		Btu/hW	12.17	12.08	10.53	11.67	12.72	13.55	11.71
Indoor Unit									
Air Volume		m³/min	25.0	25.0	25.0	25.0	36.4	36.4	36.4
		cfm	882	882	882	882	1,285	1,285	1,285
Sound Pressure Level (Hi/Lo)		dB (A)	42/35	42/35	42/35	42/35	47/41	47/41	47/41
Sound Power Level (Hi/Lo)		dB	57/50	57/50	57/50	57/50	62/56	62/56	62/56
Dimension	Indoor (H×W×D)	mm	256 × 840 × 840	256 × 840 × 840	256 × 840 × 840	256 × 840 × 840	319 × 840 × 840	319 × 840 × 840	319 × 840 × 840
	Panel (H×W×D)	mm	33.5 × 950 × 950	33.5 × 950 × 950	33.5 × 950 × 950	33.5 × 950 × 950	33.5 × 950 × 950	33.5 × 950 × 950	33.5 × 950 × 950
Net Weight	Indoor	kg	21	21	21	21	24	24	24
	Panel	kg	5	5	5	5	5	5	5
Outdoor Unit									
Sound Pressure Level		dB (A)	50	52	54	54	55	58	58
Sound Power Level		dB	66	68	69	69	70	72	72
Dimension	Outdoor (H×W×D)	mm	619 × 824 × 299	619 × 824 × 299	695 × 875 × 320	695 × 875 × 320	695 × 875 × 320	996 × 980 × 370	996 × 980 × 370
Net Weight		kg	36	42	56	56	56	75	78
Piping Connection	Gas Pipe	mm (inch)	12.70 (1/2)	12.70 (1/2)	15.88 (5/8)	15.88 (5/8)	15.88 (5/8)	15.88 (5/8)	15.88 (5/8)
	Liquid Pipe	mm (inch)	6.35 (1/4)	6.35 (1/4)	9.52 (3/8)	9.52 (3/8)	9.52 (3/8)	9.52 (3/8)	9.52 (3/8)
Pipe Length	Min–Max	m	7.5 - 30	7.5 - 30	7.5 - 45	7.5 - 45	7.5 - 45	7.5 - 50	7.5 - 50
Elevation Difference			20	20	30	30	30	30	30
Maximum Chargeless Length	Max	m	7.5	7.5	7.5	7.5	7.5	7.5	7.5
Refrigerant Type/Additional Gas		g/m	R32/15	R32/15	R32/25	R32/25	R32/25	R32/25	R32/25
Operating Range, Outdoor	Min–Max	°C	16-43	16-43	16-43	16-43	16-43	16-43	16-43

*Specifications are subject to change without notice.Please refer to technical documents for more details.
*The sound pressure level is measured in accordance with JIS C 9612 and JIS B 8616.

CEILING & CONSOLE

- The slim design makes thickness only 235mm.

A Wireless remote controller is in the same package with the indoor unit.

CZ-RWCB1H (Wireless)

(Optional)

CZ-RTCB1H (Wired)

NON-INVERTER

R410A

Capacity (Btu/h)			18,000	24,000	30,000	36,000	48,000	60,000
Power Source		V/Phase Hz	220-240V~, 1phase, 50Hz			380-415V~, 3phase, 50Hz		
Indoor			S-18PTB1H5	S-24PTB1H5	S-30PTB1H5	S-36PTB1H5	S-48PTB1H5	S-60PTB1H5
Outdoor			U-18PVB1H5	U-24PVB1H5	U-30PVB1H5	U-36PVB1H8	U-48PVB1H8	U-60PVB1H8
Cooling Capacity: Rated		kW	5.30	7.20	8.20	10.60	14.00	17.60
		Btu/h	18,000	24,000	30,000	36,000	48,000	60,000
Current		A	8.00	9.20	11.30	6.49	10.00	12.00
Power Input: Rated		kW	1.76	2.39	2.50	3.73	5.00	5.71
Efficiency Ratio	COP	W/W	3.01	3.01	3.28	2.84	2.80	3.08
	EER	(Btu/h)/W	10.27	10.28	11.19	9.70	9.55	10.52
Indoor Unit								
Air Volume (Hi/Mi/Lo)		m^3/min	15.8/11.6/9.3	25.3/21/13.3	25.3/21/13.3	25.3/21/13.3	33.3/30/20.8	33.3/30/20.8
		cfm	558/411/329	894/741/470	894/741/470	894/741/470	1,176/1,058/735	1,176/1,058/735
Sound Pressure Level (Hi/Mi/Lo)		dB (A)	44/38/33	50/46/42	50/46/42	50/46/42	52/47/44	52/47/44
Sound Power Level (Hi/Mi/Lo)		dB	52/46/41	59/55/51	59/55/51	59/55/51	62/57/54	62/57/54
Dimension (H×W×D)	Indoor	mm	690×1,000×235	690×1,280×235	690×1,280×235	690×1,280×235	690×1,600×235	690×1,600×235
	Indoor Package	mm	770×1,080×325	770×1,360×325	770×1,360×325	770×1,360×325	770×1,680×325	770×1,680×325
Weight (Net/Gross)		kg	29.0/33.0	36.0/42.0	36.0/42.0	36.0/42.0	44.0/50.5	44.0/50.5
Outdoor Unit								
Sound Pressure Level		dB (A)	55	60	58	60	60	60
Sound Power Level		dB	63	68	67	69	70	70
Dimension (H×W×D)	Outdoor	mm	545×800×315	655×825×310	700×900×350	805×970×395	1,325×940×340	1,325×940×340
	Outdoor Package	mm	620×920×400	725×945×435	770×1,020×430	890×1,105×495	1,435×1,070×450	1,435×1,070×450
Weight (Net/Gross)		kg	36.0/39.0	45.0/48.5	55.0/59.0	68.0/72.5	95.0/105.0	104.5/109.5
Piping Connection	Gas Pipe	mm (inch)	12.7 (1/2")	15.88 (5/8")	15.88 (5/8")	15.88 (5/8")	19.05 (3/4")	19.05 (3/4")
	Liquid Pipe	mm (inch)	6.35 (1/4")	9.52 (3/8")	9.52 (3/8")	9.52 (3/8")	9.52 (3/8")	9.52 (3/8")
Pipe Length (Max)		m	30	30	30	50	50	50
Elevation Difference		m	15	20	20	30	30	30
Maximum Chargeless Length (Max)		m	5	5	5	5	5	5
Additional Gas		g/m	20	40	40	40	40	40
Operating Range, Outdoor (Min-Max)		°C	17-49	17-49	17-49	17-49	17-49	17-49

Dimensions

18,000 Btu/h

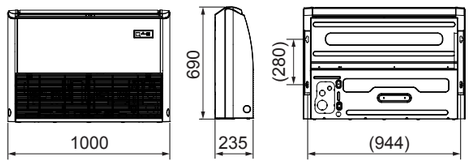

24,000 - 36,000 Btu/h

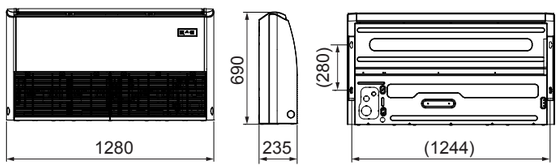

48,000 - 60,000 Btu/h

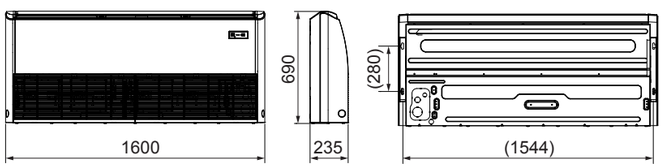

CEILING DUCTED

- Air intake from rear as standard.

NON-INVERTER

R410A

A Wired remote controller is in the same package with the indoor unit.

CZ-RTCB1H (Wired)

Capacity (Btu/h)			18,000	24,000	30,000	36,000	48,000	60,000
Power Source		V/Phase Hz	220-240V~, 1phase, 50Hz			380-415V~, 3phase, 50Hz		
Indoor			S-18PFB1H5	S-24PFB1H5	S-30PFB1H5	S-36PFB1H5	S-48PFB1H5	S-60PFB1H5
Outdoor			U-18PVB1H5	U-24PVB1H5	U-30PVB1H5	U-36PVB1H8	U-48PVB1H8	U-60PVB1H8
Cooling Capacity: Rated		kW	5.30	7.20	8.21	10.60	14.00	17.60
		Btu/h	18,000	24,000	30,000	36,000	48,000	60,000
Current		A	8.00	9.50	11.00	6.69	10.00	12.00
Power Input: Rated		kW	1.73	2.39	2.42	3.73	4.87	5.71
Efficiency Ratio	COP	W/W	3.06	3.01	3.39	2.84	2.87	3.08
	EER	(Btu/h)/W	10.44	10.27	11.57	9.69	9.79	10.51
External Static Pressure		Pa	50	50	50	50	80	80
Indoor Unit								
Air Volume (Hi/Mi/Lo)		m^3/min	15.8/13.3/11.7	21.7/20.8/19.2	27.5/24.2/20.8	27.5/24.2/20.8	35/33.3/26.7	35/33.3/26.7
		cfm	564/475/418	775/743/685	982/864/743	982/864/743	1,250/1,189/953	1,250/1,189/953
Sound Pressure Level (Hi/Mi/Lo)		dB (A)	44/41/35	47/44/38	50/47/41	50/47/41	51/49/46	53/50/44
Sound Power Level (Hi/Mi/Lo)		dB	52/49/43	55/52/46	59/56/50	59/56/50	61/59/56	63/60/54
Dimension (H×W×D)	Indoor	mm	290×890×735	290×890×735	290×890×735	290×890×735	290×1,250×735	290×1,250×735
	Indoor Package	mm	360×1,070×800	360×1,070×800	360×1,070×800	360×1,070×800	360×1,430×800	360×1,430×800
Weight (Net/Gross)		kg	34.0/40.0	36.0/42.0	36.0/42.0	36.0/42.0	45.0/51.0	45.0/51.0
Outdoor Unit								
Sound Pressure Level		dB (A)	55	60	58	60	60	60
Sound Power Level		dB	63	68	67	69	70	70
Dimension (H×W×D)	Outdoor	mm	545×800×315	655×825×310	700×900×350	805×970×395	1,325×940×340	1,325×940×340
	Outdoor Package	mm	620×920×400	725×945×435	770×1,020×430	890×1,105×495	1,435×1,070×450	1,435×1,070×450
Weight (Net/Gross)		kg	36.0/39.0	45.0/48.5	55.0/59.0	68.0/72.5	95.0/105.0	104.5/109.5
Piping Connection	Gas Pipe	mm (inch)	12.7 (1/2")	15.88 (5/8")	15.88 (5/8")	15.88 (5/8")	19.05 (3/4")	19.05 (3/4")
	Liquid Pipe	mm (inch)	6.35 (1/4")	9.52 (3/8")	9.52 (3/8")	9.52 (3/8")	9.52 (3/8")	9.52 (3/8")
Pipe Length (Max)		m	30	30	30	50	50	50
Elevation Difference		m	15	20	20	30	30	30
Maximum Chargeless Length (Max)		m	5	5	5	5	5	5
Additional Gas		g/m	20	40	40	40	40	40
Operating Range, Outdoor (Min-Max)		°C	17-49	17-49	17-49	17-49	17-49	17-49

Dimensions

18,000 - 36,000 Btu/h

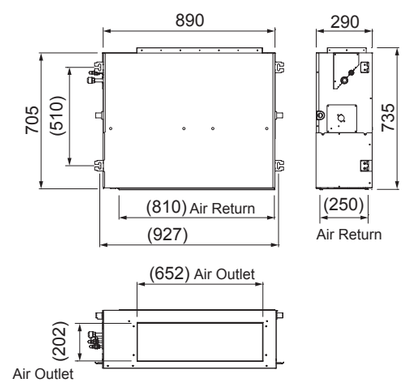

48,000 - 60,000 Btu/h

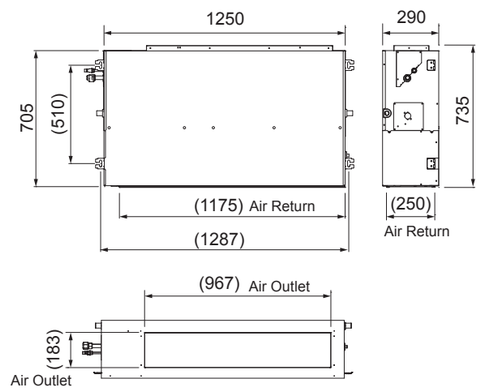

FLOOR STANDING

Model No.
CS-C18FFH
CS-C28FFH
CS-C45FFH

TECHNICAL FOCUS

- 12-Hour On/Off Real Setting Timer
- Random Auto Restart (*2/3HP)
- Auto Fan Mode
- Self-Diagnostic Function (*5HP)
- Auto Freezing Control (2/3HP)

Remote Controller

A wireless remote controller is in the same package with the indoor unit.

Capacity (Btu/h)			17,400 - 17,600	24,600 - 25,000	41,000 - 42,700
Power Source		V/Phase Hz	220 - 240 V, 1Ø Phase - 50 Hz		380 - 415 V, 3Ø phase - 50Hz
Indoor			CS-C18FFH	CS-C28FFH	CS-C45FFH
Outdoor			CU-C18FFH	CU-C28FFH	CU-C45FFH
Cooling Capacity: Rated		kW	5.10 - 5.15	7.20 - 7.30	12.0 - 12.5
		Btu/h	17,400 - 17,600	24,600 - 25,000	41,000 - 42,700
Current		A	8.65 - 8.80	11.9 - 12.0	8.4
Power Input: Rated		kW	1.90 - 1.95	2.60 - 2.65	4.71 - 4.80
EER		W/W	2.68 - 2.64	2.76 - 2.75	2.54 - 2.60
		Btu/hW	9.15 - 9.02	9.46 - 9.43	8.70 - 8.89
Indoor Unit					
Air Volume		m^3/min	14.5 - 15.5	15.0 - 16.2	27.0
Sound Pressure Level (Hi/Lo)		dB (A)	(46 / 40) - (47 / 41)	(48 / 42) - (49 / 43)	53 / 47
Dimension	Indoor (H×W×D)	mm	1,680 × 500 × 298	1,680 × 500 × 298	1,880 × 600 × 350
Net Weight		kg	34.0	35.0	52.0
Outdoor Unit					
Sound Pressure Level		dB (A)	53 - 54	53 - 54	57
Dimension	Outdoor (H×W×D)	mm	540 × 780 × 289	795 × 900 × 320	1,175 × 900 × 320
Net weight		kg	40.0	55.0	88.0
Piping Connection	Gas Pipe	mm (inch)	12.70 (1/2")	15.88 (5/8")	19.05 (3/4")
	Liquid Pipe	mm (inch)	6.35 (1/4")	9.52 (3/8")	9.53 (3/8")
Pipe Length	Min–Max	m	3.0 - 10.0	3.0 - 15.0	7.5 - 30.0
Elevation Difference			7.0	10.0	20.0
Maximum Chargeless Length	Max	m	7.0	7.0	15.0
Additional Gas		g/m	25	30	50
Operating Range, Outdoor	Min–Max	°C	21 - 43	21 - 43	21 - 43

Dimensions (CS-C18FFH / CS-C28FFH)

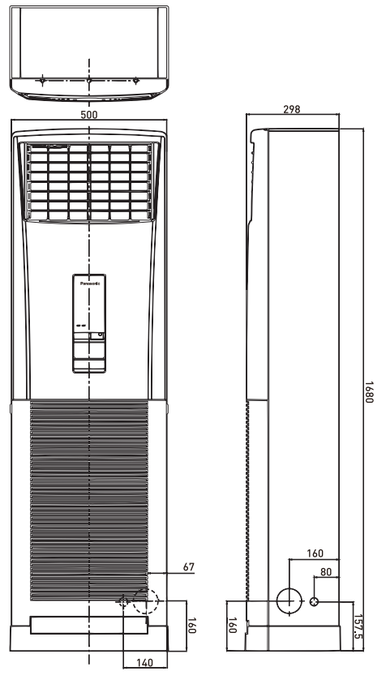

Unit:mm

Dimensions (CS-C45FFH)

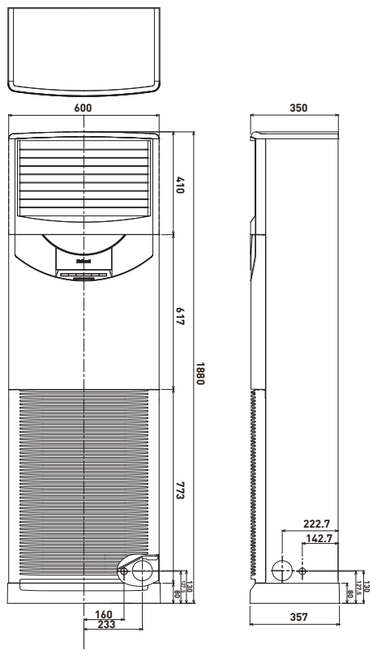

Unit:mm

Please refer to technical documents for more details.

OUTDOOR UNITS NEW

Dimensions (U-19PN1H5 / U-25PN1H5) 1-phase

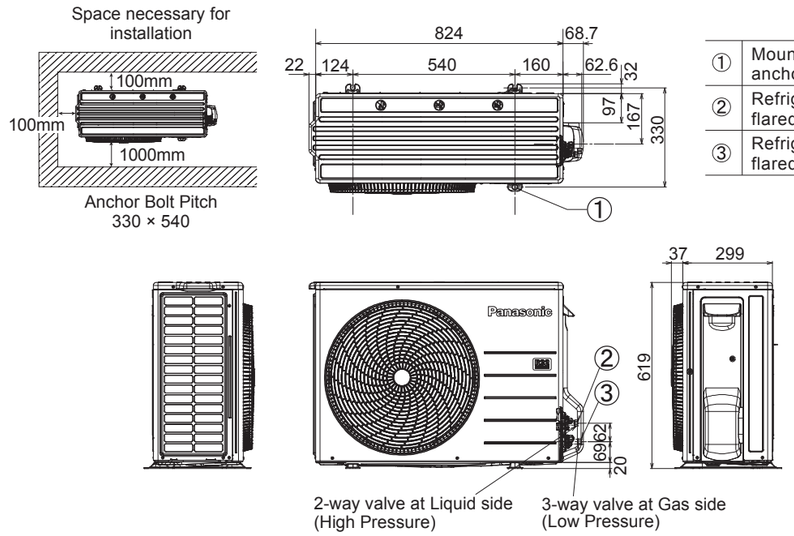

①	Mounting hole (4-R6.5), anchor bolt : M10
②	Refrigerant tubing (liquid tube), flared connection (φ6.35)
③	Refrigerant tubing (gas tube), flared connection (φ12.70)

Unit:mm

Dimensions (U-30PN1H5) 1-phase (U-30PN1H8 / U-36PN1H8) 3-phase

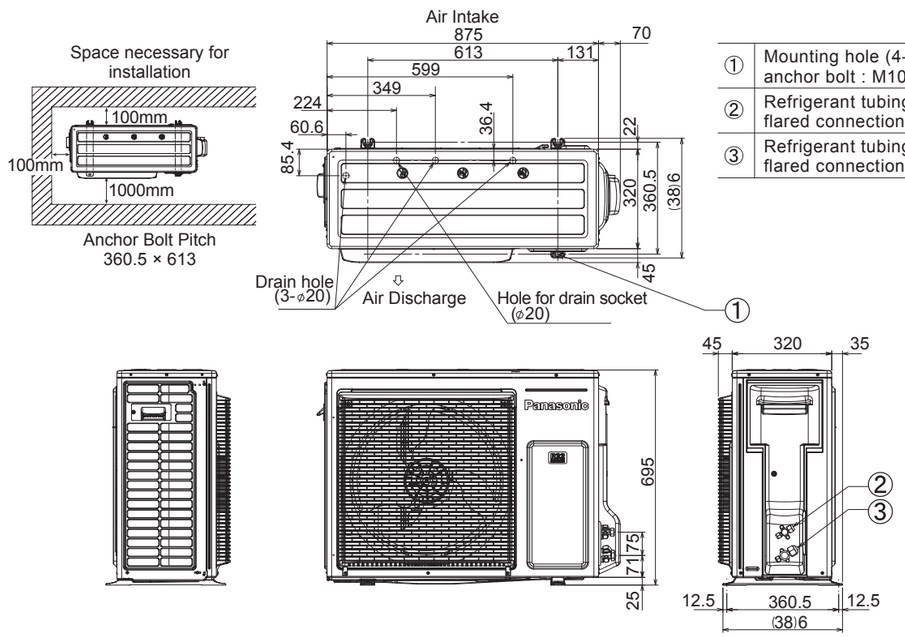

①	Mounting hole (4-R6.5), anchor bolt : M10
②	Refrigerant tubing (liquid tube), flared connection (φ9.52)
③	Refrigerant tubing (gas tube), flared connection (φ15.88)

Unit:mm

Dimensions (U-42PN1H8 / U-50PN1H8) 3-phase

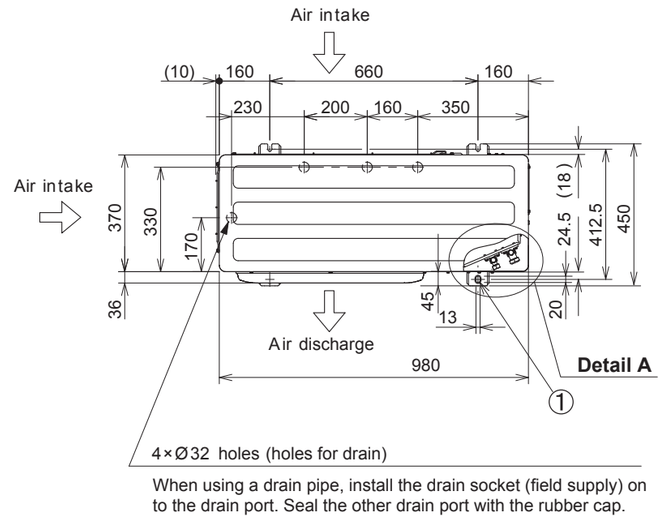

When using a drain pipe, install the drain socket (field supply) on to the drain port. Seal the other drain port with the rubber cap.

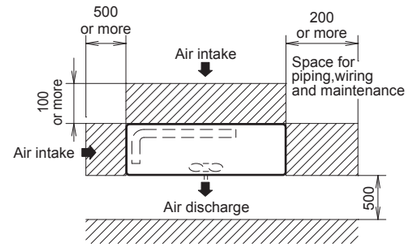

①	Mounting hole (4-R6.5), anchor bolt : M10
②	Refrigerant tubing (liquid tube), flared connection (Ø9.52)
③	Refrigerant tubing (gas tube), flared connection (Ø15.88)
④	Refrigerant tubing port
⑤	Electrical wiring port (Ø13)
⑥	Electrical wiring port (Ø22)
⑦	Electrical wiring port (Ø27)
⑧	Electrical wiring port (Ø35)

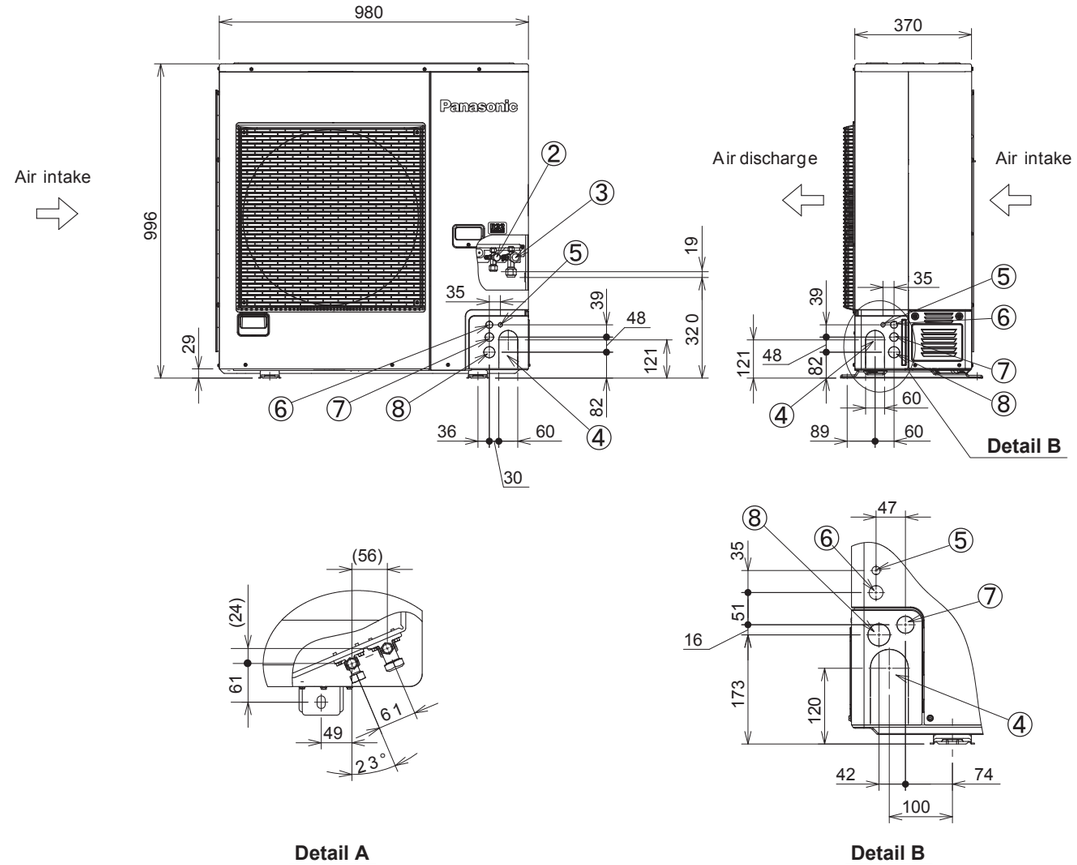

Unit:mm

OUTDOOR UNITS

4-WAY CASSETTE / CEILING / DUCTED

Dimensions (U-18PV1H5 / U-22PV1H5 / U-25PV1H5 / U-28PV1H5 / U-30PV1H5) 1-phase

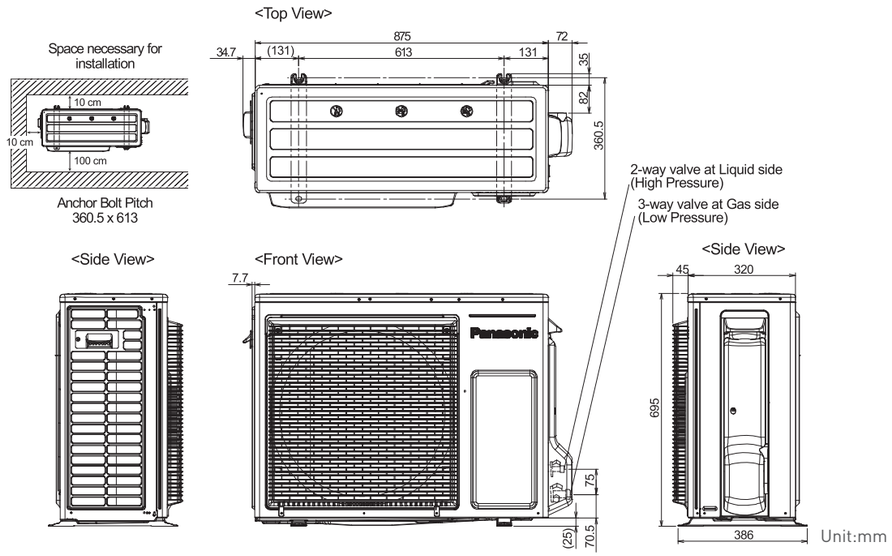

4-WAY CASSETTE / CEILING / DUCTED

Dimensions (U-35PV1H8 / U-40PV1H8 / U-45PV1H8 / U-50PV1H8) 3-phase

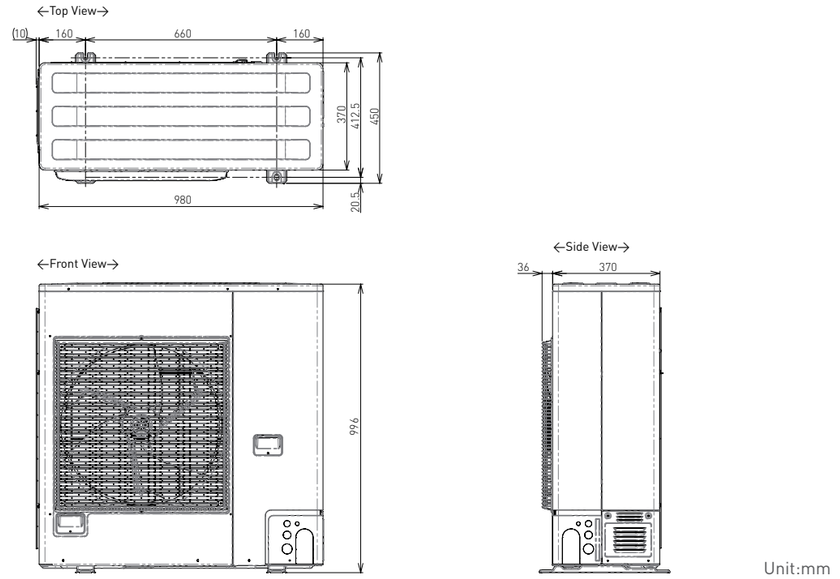

4-WAY CASSETTE

Dimensions (U-30PV1H8) 3-phase

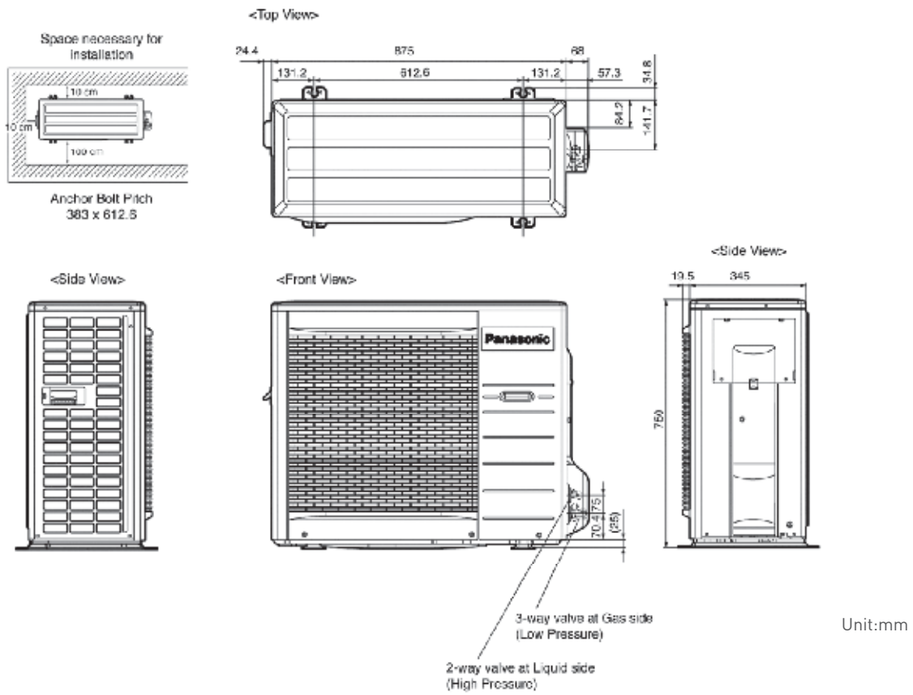

CEILING / DUCTED

Dimensions (U-55PV1H8) 3-phase

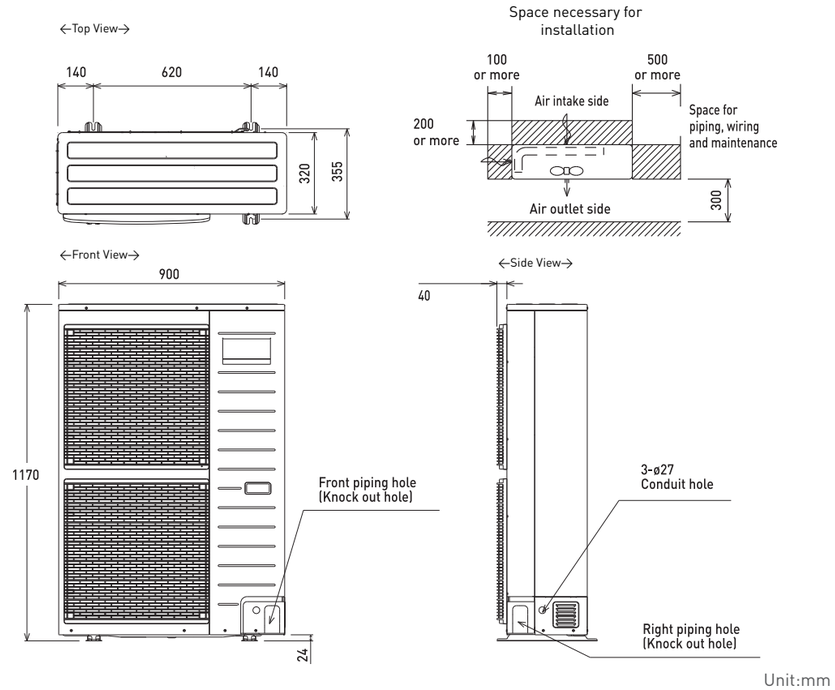

OUTDOOR UNITS

FLOOR STANDING

Dimensions (CU-C18FFH) 1-phase

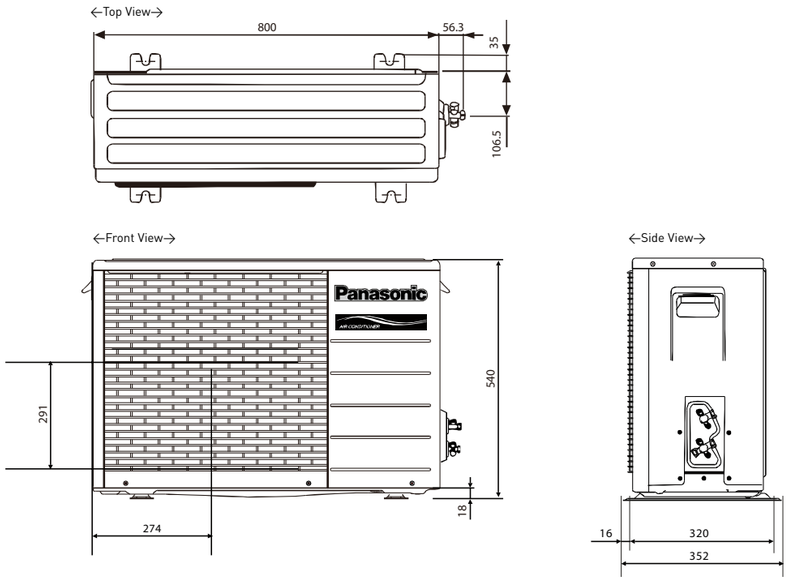

Unit:mm

Dimensions (CU-C28FFH) 3-phase

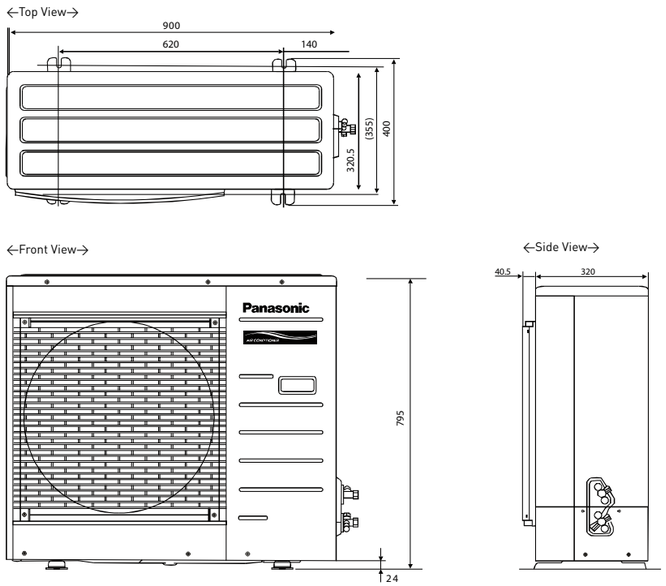

Unit:mm

Dimensions (CU-C45FFH) 3-phase

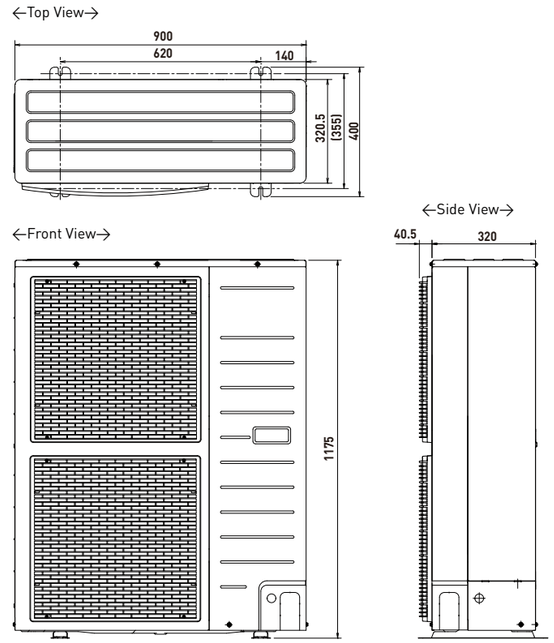

Unit:mm

MINI CASSETTE

Dimensions (CU-PC18DB4H / CU-PC24DB4H) 1-phase

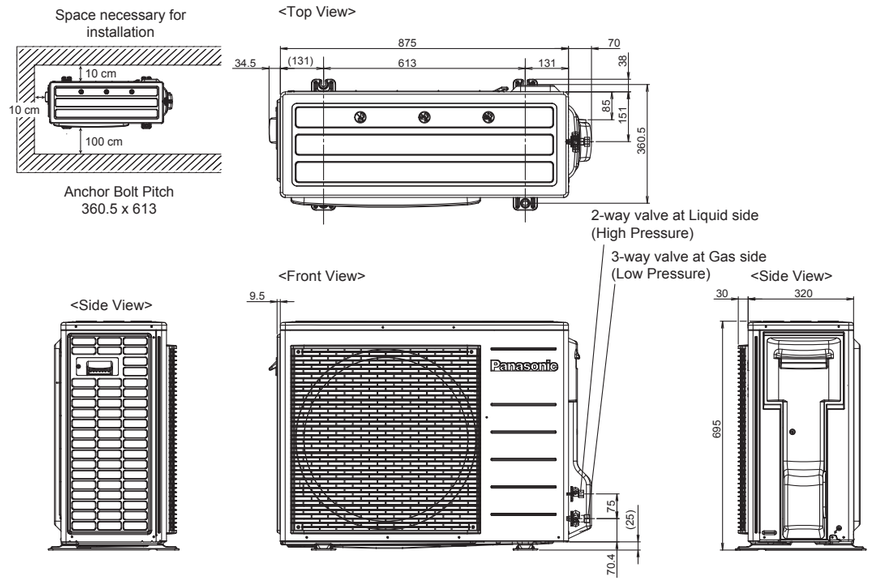

Unit:mm