GILKON AUSTRALIA

Data Sheet

TILT ADJUSTABLE PLASMA DISPLAY WALL MOUNT

The new Gilkon Plasma Mount is designed for wall mounting. Gilkon's unique manufactured silver steel channels allow for ventilation while maintaining a low profile, clean, seamless look. Design includes multiple mounting points for easy site installation. The Gilkon "Slot Lock" design allows the wall frame to be safely secured to the wall, and the plasma (with Gilkon vertical rails attached) clicks into position. Models to suit most 32" to 50" plasma displays.

GILKON ADJUSTABLE PLASMA MOUNT	
Dimensions L x H x W (mm)	830 x 570 x 52
Weight (Kg)	80
Downward Angle	Up to 15°
Maximum Distance Between Hole Centres (mm)	
- Horizontal	729 mm
- Vertical	473 mm
Code	8MPMA

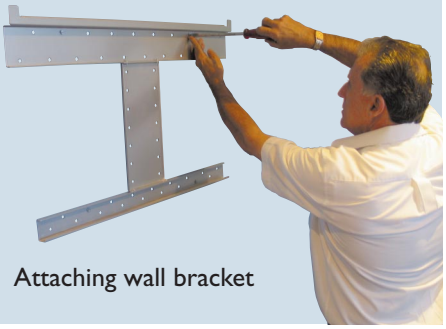

Attaching wall bracket

Key lock security

Tilt adjustment

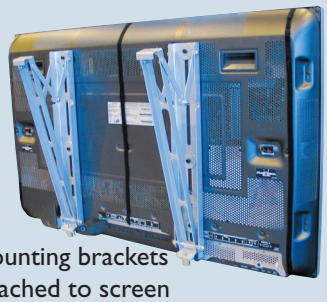

Mounting brackets attached to screen

Distributed By:

Wilson Gilkes

P.O. Box 63,
Moorebank NSW 1875
337 - 349 Newbridge Road,
Moorebank NSW 2170

Phone: (02) 9914 0900
Fax: (02) 9914 0901
Int. Fax: 61-2-9914 0901
Email: sales@gilkon.com.au

Web Site: www.gilkon.com.au

March,2006

GILKON AUSTRALIA

Data Sheet

TILT ADJUSTABLE PLASMA DISPLAY WALL MOUNT

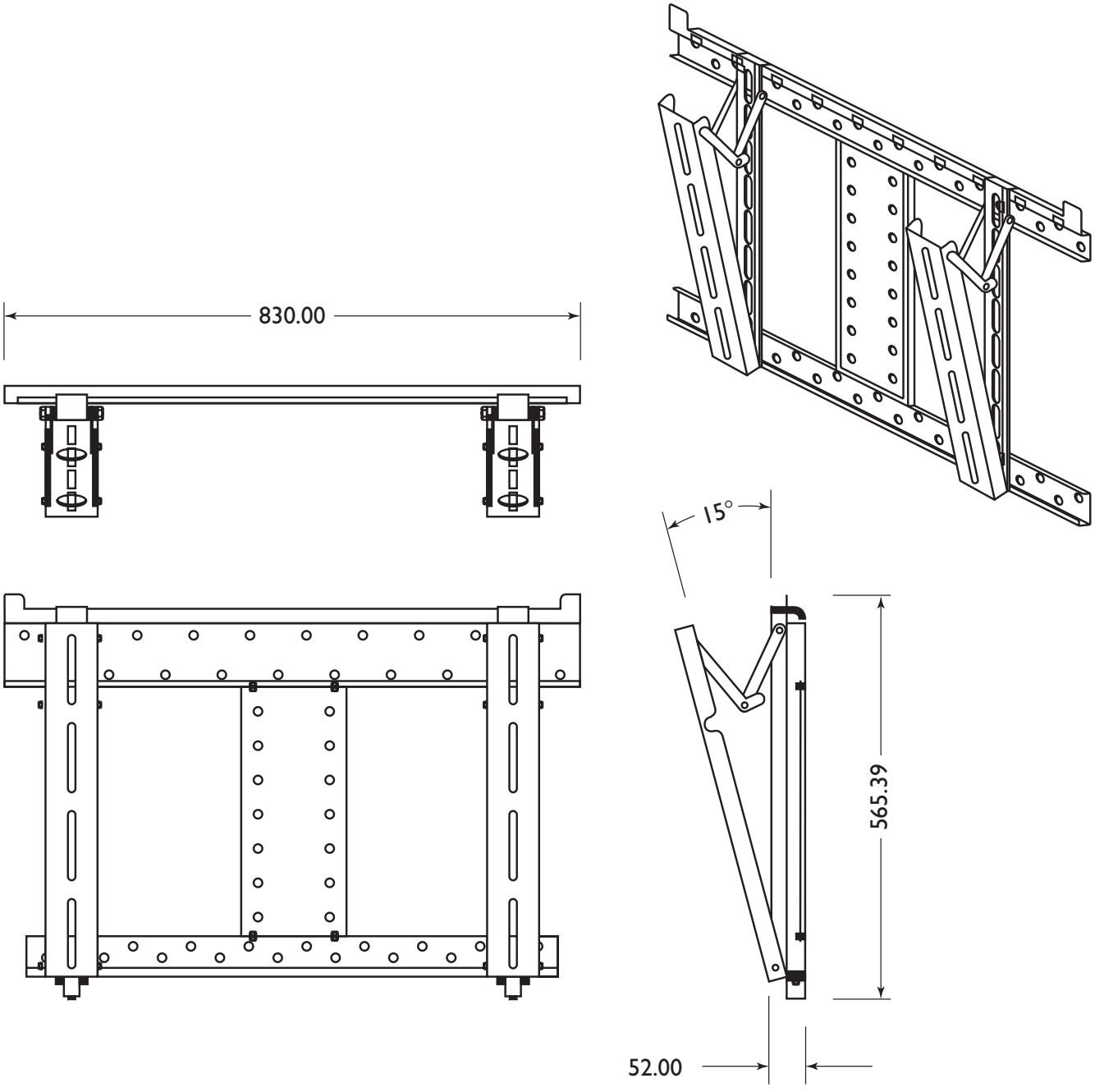

8MPMA

Distributed By:

Wilson Gilkes

P.O. Box 63,
Moorebank NSW 1875
337 - 349 Newbridge Road,
Moorebank NSW 2170

Phone: (02) 9914 0900
Fax: (02) 9914 0901
Int. Fax: 61-2-9914 0901
Email: sales@gilkon.com.au

Web Site: www.gilkon.com.au

March,2006