4-WAY CASSETTE NEW Dimensions

Ⓐ S-1821PU3H-1/S-2430PU3H-1
Ⓑ S-3448PU3H-1

① Air intake
② Discharge outlet
③ Refrigerant tubing (liquid tube)
④ Refrigerant tubing (gas tube)
⑤ Drain tube connection port VP25 (outer dia. ø32)
⑥ Power supply port
⑦ Suspension bolt hole (4-12×30 elongated hole)

<Filter dimension> 520 x 520 x 15

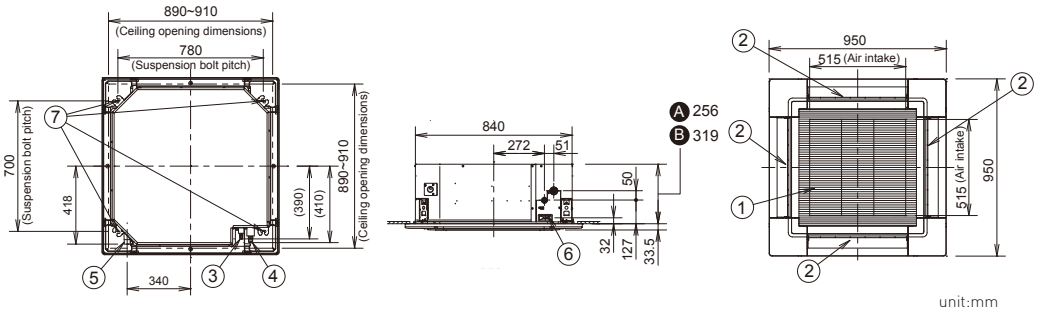

unit:mm

ADAPTIVE DUCTED NEW Dimensions

S-1821PF3H/S-2430PF3H/S-3448PF3H

Detailed dimensions of indoor unit

Type	A	B	C	D	E	F
	mm	mm	mm	mm	mm	Q'ty
1821	867	800	450 (Pitch 150 × 3)	71	592	12
2430	1,067	1,000	750 (Pitch 150 × 5)	21	792	16
3448	1,467	1,400	1,050 (Pitch 150 × 7)	71	1,192	20

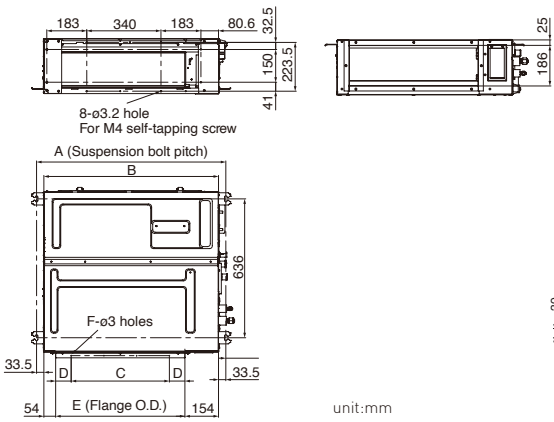

unit:mm

CEILING EXPOSED NEW Dimensions

S-1821PT3H

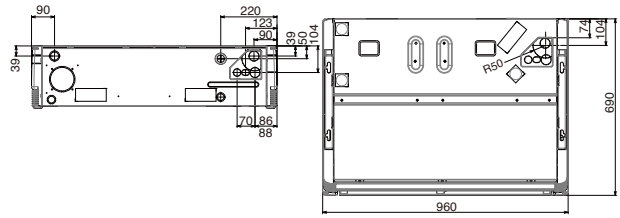

S-2430PT3H

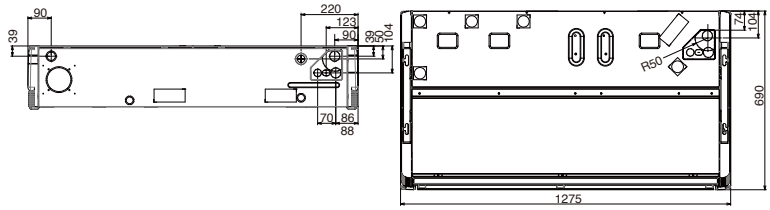

S-3448PT3H

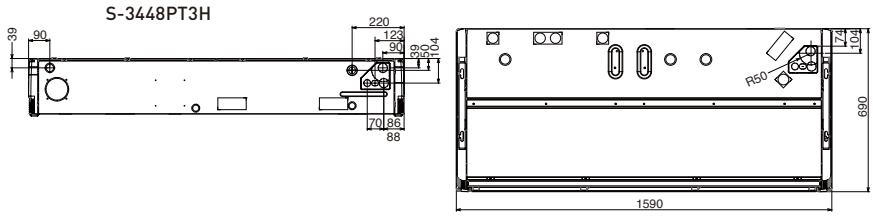

unit:mm

OUTDOOR UNITS NEW Dimensions

U-18PR1H5-1/U-21PR1H5-1/U-24PR1H5-1

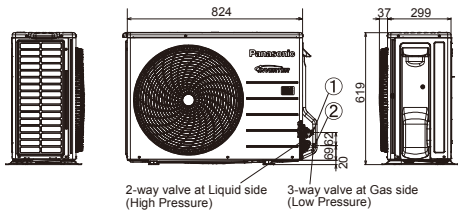

①	Refrigerant tubing (liquid tube), flared connection (φ6.35⁺¹/9.52⁺²)
②	Refrigerant tubing (gas tube), flared connection (φ12.70⁺¹/15.88⁺²)

*1 U-18/21PR1H5-1
*2 U-24PR1H5-1
*Mounting hole (4-R6.5), anchor bolt : M10

U-30PR1H5-1/U-34PR1H5-1

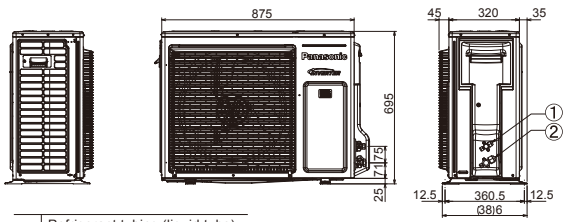

①	Refrigerant tubing (liquid tube), flared connection (φ9.52)
②	Refrigerant tubing (gas tube), flared connection (φ15.88)

*Mounting hole (4-R6.5), anchor bolt : M10

U-43PR1H5-1/U-43PR1H8-1/U-48PR1H5-1/U-48PR1H8-1

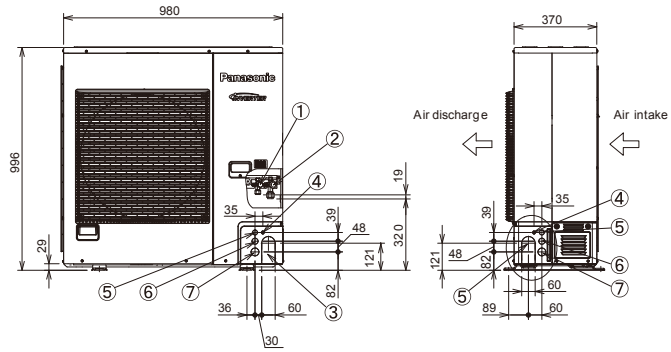

①	Refrigerant tubing (liquid tube), flared connection (Ø9.52)
②	Refrigerant tubing (gas tube), flared connection (Ø15.88)
③	Refrigerant tubing port
④	Electrical wiring port (Ø13)
⑤	Electrical wiring port (Ø22)
⑥	Electrical wiring port (Ø27)
⑦	Electrical wiring port (Ø35)

*Mounting hole (4-R6.5), anchor bolt : M10

unit:mm