Panasonic®

**Building Passion,**
**Building Solutions.**
Panasonic Air Conditioning Systems

We face a time in which "quality air" differentiates business. It's a time for Panasonic to fully display its strengths. Our ability to assemble and build superior systems isn't just due to the rich resources we have as a comprehensive electronics manufacturer, but also to Panasonic's 100 years of tradition, where each person thinks and acts on their own initiative while working in a team to reach further heights. We do not compromise. Each of our independent selves is a one stop solution. We face our customers' challenges together with our customers and do all that we can to build effective systems. As a true partner for our customers, we strive to always be at the forefront of business.

- Please read the Installation Instructions carefully before installing the unit, and the Operating Instructions before using it.
- Specifications are subject to change without prior notice.
- The contents of this catalogue are accurate as of March 2023.
- Due to printing considerations, actual colours may vary slightly from those shown.
- All graphics are provided solely for the purpose of illustrating a point.

⚠ Do not add or replace refrigerant other than the specified type. Manufacturer is not responsible for damage or deterioration in safety due to usage of other refrigerant.

Authorised Dealer

ABS JAPAN_MARCH 2023

Panasonic Corporation
Heating and Ventilation A/C Company



Panasonic

Contact us using this QR code.

Absorption chiller inquiry

# ABSORPTION CHILLERS
# ABSORPTION CHILLERS/HEATERS

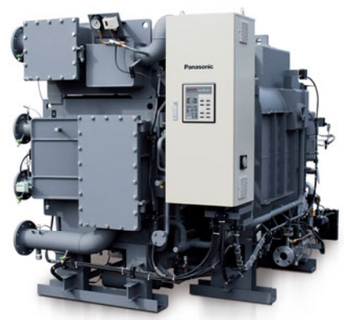

QUALITY AIR FOR LIFE

# PANASONIC ABSORPTION CHILLERS

Panasonic has been one of the leading companies in absorption chiller industry for more than 50 years not only in Japan, but also in various countries all over the world.
It is no exaggeration to say that a large part of the absorption chillers on the market today are modeled after Panasonic absorption chillers. Panasonic has always set new standard in the absorption chiller industry.
With our high precision engineering ability and the spirit of craftsmanship, Panasonic continues to develop new innovative technologies for absorption chillers to bring comfortable environment to our customers.

over 50 years since launch

## Made in Japan

Absorption chillers require high precision welding techniques, as the vacuum level inside the chiller greatly affects its lifespan. Production of absorption chillers takes place at our factory in Gunma, Japan, which has produced many skilled craftsmen, and we deliver high-quality products to our customers though out the world.


## PROVEN QUALITY THROUGH LONG YEARS OF EXPERIENCE

Since the release of the 1st Panasonic absorption chiller in 1971, Panasonic has been one of the most popular absorption chiller brands in Japan. Our installation record in Japan reached 6.8 million RT (24,100 MW) and this number continues to grow, supported by customer's trust in our high quality products realized through long years of experience

Achieved **6.8** million RT (24,100 MW) installation in Japan

■ Cumulative cooling capacity of Panasonic absorption chiller in Japan

Unit : 1,000RT (1RT =3.52 kW)

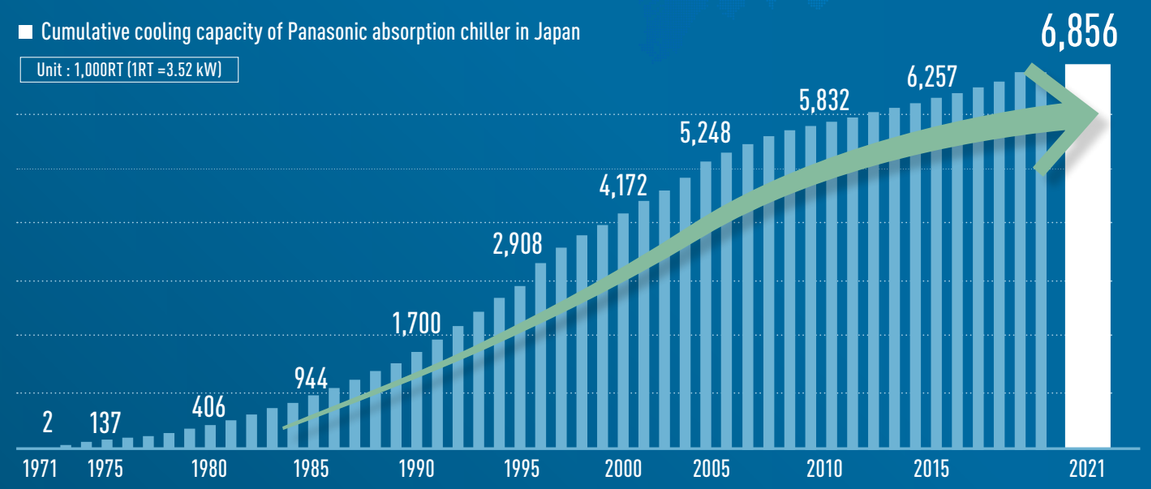

# PRODUCT FEATURES

## High reliability and Energy saving realized by Panasonic's advanced design

### New purge system to ensure excellent vacuum condition

Double effect model only

In order to keep excellent performance of absorption chiller, it is important to keep good vacuum condition inside the chiller. The newly designed high performance purge system of Panasonic maintains the required operating pressure of the chiller and keep reliable operation. This can minimize chiller maintenance costs. Non condensable gas in the chiller is collected to the purge tank of the chiller and the collected gas shall be evacuated by the newly developed dry pump which is installed on the purge tank. The dry pump does not require troublesome maintenance like replacement of lubrication oil. Panasonic chiller is equipped with a conventional oil rotary vacuum pump as well for maintenance use and it enables stable and reliable operation.

Dry pump auto purging system (standard)
Double effect model only

### High efficiency

By using various innovative technologies, Panasonic absorption chiller achieves high efficiency and this will help customers to reduce operation costs drastically. With two step evaporation and absorption technology and other additional heat exchangers, out flagship double effect CP type model (Gas fired) and R type model (Gas fired) achieve world class COP. Not only COP at the full load operation, Panasonic is pursuing high efficiency operation at part load operation. By using double inverter controlled absorbent pump, CP type model and R type model achieve excellent part load operation with high efficiency. F series steam type double effect models also have inverter controlled absorbent pump and offer excellent part load efficiency. All our models including single effect models are equipped with specially designed heat transfer tubes and plate type heat exchangers in order to increase efficiency and minimize operation costs.

### Other features

#### Marine water boxes

Absorber and Condenser water boxes are marine type for easy access to the tubes without disconnecting any pipings. Cooling water circuit is normally open type, so it is necessary to clean Absorber and Condenser from time to time. This feature is important for ease of maintenance.

#### Anti corrosion design

- Parkerizing material processing has been done in order to remove the grease and rusty spot of material in order to make a uniform film on the surface of carbon steel.
- Lithium Molybdate is used as corrosion inhibitor which is effective and not toxic like conventional Lithium Chromate. Unlike conventional Lithium Nitrate, Lithium Molybdate does not generate ammonia, which has a significant negative impact on machine operation.

#### Gravity feed system

Evaporator and Absorber distribution trays are gravity feed type which eliminate a risk of clogging that can happen frequently in case of spray nozzle type solution feeding system. These trays are made of corrosion resistant stainless steel for enhanced durability.

#### Isolation valves on pumps

Absorbent and Refrigerant pumps suction and discharge connections are equipped with factory installed isolation valves which permit quick and easy servicing of pumps with minimum downtime. (Except Refrigerant pump of LJ cabin type.)

#### Plate heat exchangers

Plate heat exchangers increase the efficiency of the internal heat exchange and reduce the amount of heat input significantly as compared to conventional shell and tube heat exchangers.

# ABSORPTION CHILLER LINEUP

| DRIVING HEAT SOURCE | MODEL | |
|---|---|---|
| NATURAL GAS HIGH EFFICIENCY | Double Effect Direct Fired | |
| | Model : **QAW-CP100FG - QEW-CP700FG** | 100 RT – 700 RT |
| | Capacity : **100 - 700 RT / 352 - 2,461 kW** | |
| DUAL FUEL (NATURAL GAS & DIESEL) HIGH EFFICIENCY | Double Effect Direct Fired | |
| | Model : **QAW-CP180FC - QEW-CP700FC** | 180 RT – 700 RT |
| | Capacity : **180 - 700 RT / 633 - 2,461 kW** | |
| NATURAL GAS COMPACT TYPE | Double Effect Direct Fired | |
| | Model : **QAW-R100FG - QFW-R900FG** | 100 RT – 900 RT |
| | Capacity : **100 - 900 RT / 352 - 3,165 kW** | |
| DUAL FUEL (NATURAL GAS & DIESEL) COMPACT TYPE | Double Effect Direct Fired | |
| | Model : **QBW-R210FC - QFW-R800FC** | 210 RT – 800 RT |
| | Capacity : **210 - 800 RT / 738 - 2,813 kW** | |
| STEAM | Double Effect Steam Fired | |
| | Model : **QAW-100FS - QGW-12XFS** | 100 RT – 1,150 RT |
| | Capacity : **100 - 1,150 RT / 352 - 4,044 kW** | |
| HOT WATER | Single Effect Hot Water Fired | |
| | Model : **QA-75LJ - QE-525LJ** | 100 RT – 525 RT |
| | Capacity : **100 - 525RT / 352 - 1,846kW** | |
| HOT WATER (CABIN TYPE) | Single Effect Hot Water Fired | |
| | Model : **QP-25, 40, 50LJ** | 25, 40, 50 RT |
| | Capacity : **25, 40, 50 RT / 88, 140, 176 kW** | |
| LOW PRESSURE STEAM | Single Effect Steam Fired | |
| | Model : **QA-100TJ - QE-700TJ** | 100 RT – 700 RT |
| | Capacity : **100 - 700 RT / 352 - 2,461 kW** | |

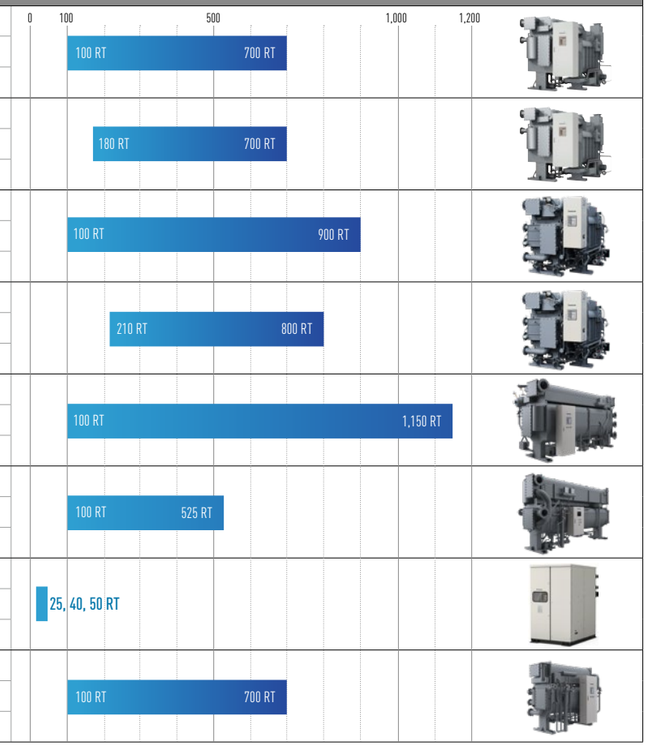


Please contact your nearest Panasonic sales representative for capacity ranges not listed in the catalog.

## Nomenclature

□□□ - □□ □□□□ □ □ □

❶ ❷ ❸ ❹ ❺ ❻ ❼ ❽

| | Item | Description | Code |
|---|---|---|---|
| ❶ | Product category | Absorption Chiller | **Q** |
| ❷ | Symbol for machine size | Small type chiller | **P** |
| | | Standard type chiller | **A to G** |
| ❸ | Type of absorption cycle | Double effect | **W** |
| | | Single effect | **None** |
| ❹ | Efficiency | Standard | **None** |
| | | High efficiency | **CP** |
| | | High partial load efficiency | **R** |
| ❺ | Capacity (USRT) | *If the capacity is 3 digits or less, it is shown as it is 25 - 12X<br>*If the capacity is 4 digits, "X" may be added<br>(Example) 1,000 >> 10X 1,150 >> 12X | **25 - 12X** |

| | Item | Description | Code |
|---|---|---|---|
| ❻ | Series | F series | **F** |
| | | LJ series | **LJ** |
| | | TJ series | **TJ** |
| ❼ | Heat source | Gas | **G** |
| | | Oil | **K** |
| | | Dual fuel | **C** |
| | | Steam | **S** |
| | | Low pressure steam | **None** |
| | | Hot water | **None** |
| ❽ | Rank up | Enhanced heating capacity by 1 rank | **1** |
| | | Enhanced heating capacity by 2 rank | **2** |

# Direct Fired Absorption Chiller/Heater

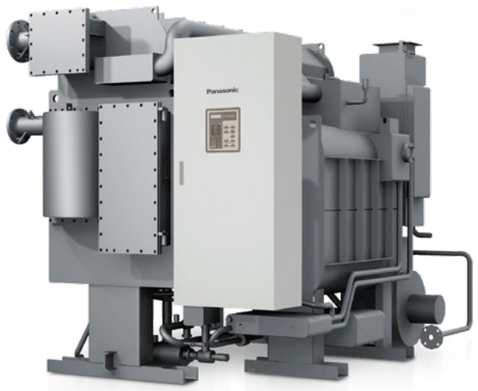

CP High Efficiency Type

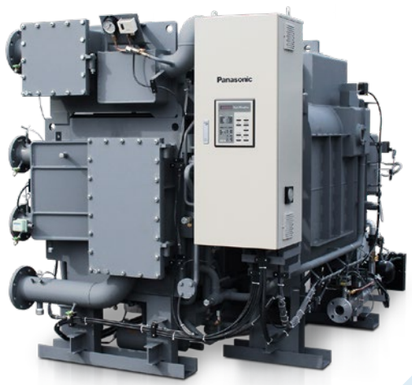

R Compact Type

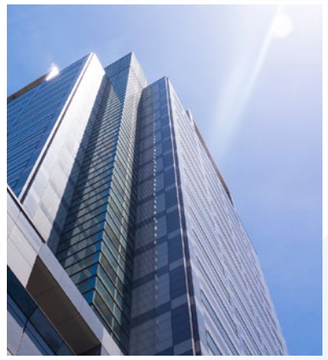

## Realizes peak shaving of electricity by using natural gas or diesel oil

Panasonic CP/R double-effect direct fired absorption chillers/heaters produce chilled water and hot water for cooling and heating applications using natural gas or diesel oil as a driving energy.
Panasonic absorption chillers/heaters use water as refrigerant and Lithium Bromide solution as absorbent and use no CFCs or HCFCs. Also, since an absorption cycle is accomplished without a large motor-compressor drive arrangement, the customer can be assured of quiet and low-vibration operation. Panasonic absorption chillers/heaters use natural gas or diesel oil as a driving energy and use very little electricity, so it can be an excellent solution for saving electricity costs.
With Panasonic absorption chillers/heaters, the unit can be used for heating during winter months without additional cost of extra controls. In many applications the chillers/heaters can replace a traditional electric chiller and boiler design combination. Panasonic CP/R absorption chillers/heaters are widely used for large commercial buildings, shopping malls and various types of large-scale facilities.



# FEATURES : DIRECT FIRED MODEL

## Low fuel consumption

Circulation amount of Lithium Bromide solution is optimally controlled by the absorbent pump inverter. In addition, Parallel flow cycle structure dramatically improves partial load chiller efficiency especially when the cooling load is 50% or less or when the cooling water inlet temperature drops.

The CP type is equipped with the exhaust gas heat exchanger that recovers heat from the exhaust gas discharged from the high-temperature generator, reducing annual gas consumption by approximately 1.5%.

### High Efficiency Type (CP type)

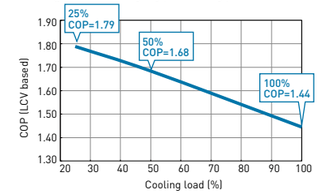


**Conditions**

- Chilled water outlet temperature = 7degC
- Chilled water flow rate = rated value (constant flow rate)
- Cooling water inlet temperature = according to JIS B 8622 2016 standard
- Cooling water flow rate = rated value (constant flow rate)

*This predicted part load efficiency curve is just for reference and it is not for guarantee.
*COP calculation is based on Lower calorific value (LCV). COP(LCV) = Cooling capacity (kW)/Heat source heat consumption (kW)

### Compact Type (R type)

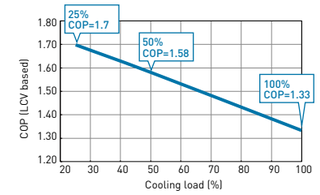


**Conditions**

- Chilled water outlet temperature = 7degC
- Chilled water flow rate = rated value (constant flow rate)
- Cooling water inlet temperature = according to JIS B 8622 2016 standard
- Cooling water flow rate = rated value (constant flow rate)

*This predicted part load efficiency curve is just for reference and it is not for guarantee.
*COP calculation is based on Lower calorific value (LCV). COP(LCV) = Cooling capacity (kW)/Heat source heat consumption (kW)

## Dual fuel burner

» See page 10-11 (CP type) and page 14-15 (R type) for specification.

Usually, natural gas is used for normal operation, but in an emergency case such as power outage (blackout) or gas supply interruption, it is possible to switch the fuel to diesel oil for chiller operation.


CP type 180 - 700RT
R type 210 - 800RT

- Gas / oil switching operation with one unit
- Performance deterioration due to soot accumulation is detected by predictive maintenance operation
- High Temperature Generator (HTG) can be opened and washed with water

### Fuel switching operation system example

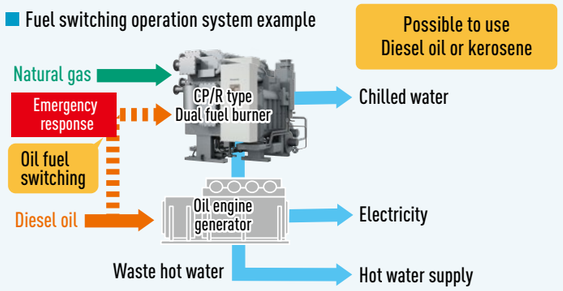


## Cycle flow diagram

### CP type Direct Fired Absorption Chiller (cooling mode)

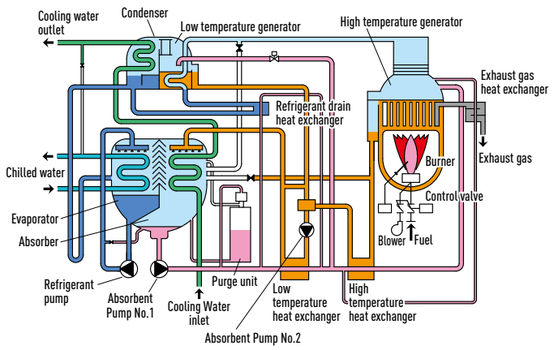


### R type Direct Fired Absorption Chiller (cooling mode)

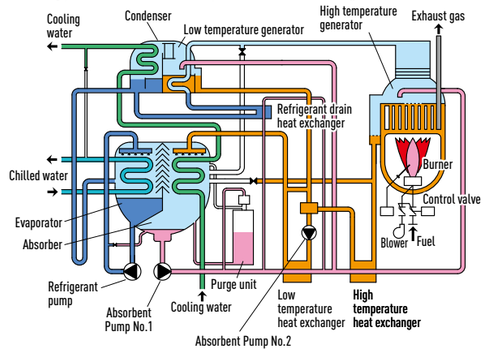


Pump operation | Pump stop | Switching valve open | Switching valve close | LiBr solution (Concentrated) | Hot water | Chilled water | Cooling water | Refrigerant | LiBr solution (Diluted) | Refrigerant vapor | Exhaust gas

## SPECIFICATION

# GAS FIRED ABSORPTION CHILLER/HEATER CP TYPE (High Efficiency Type)

| | | | Model Name | QAW-CP***FG | | | |
|---|---|---|---|---|---|---|---|
| | | | | 100 | 120 | 150 | 180 |
| Cooling capacity | | | kW | 352 | 422 | 527 | 633 |
| | | | USRT | 100 | 120 | 150 | 180 |
| Heating capacity | | | kW | 235 | 282 | 353 | 424 |
| | | | kcal/h | 202,400 | 242,880 | 303,600 | 364,320 |
| Chilled water | Temperature (Inlet→Outlet) | | °C | 12→7 | | | |
| | Flow rate | | m³/h | 60.5 | 72.6 | 90.7 | 109 |
| | Pressure drop | | kPa | 69.1 | 66.9 | 47.6 | 45.8 |
| | Connection diameter (JIS) | | A | 80 | 100 | | 125 |
| Hot water | Temperature (Inlet→Outlet) | | °C | 56.7→60 | | | |
| | Flow rate | | m³/h | 60.5 | 72.6 | 90.7 | 109 |
| | Pressure drop | | kPa | 69.1 | 66.9 | 47.6 | 45.8 |
| | Connection diameter (JIS) | | A | 80 | 100 | | 125 |
| Cooling water | Temperature (Inlet→Outlet) | | °C | 32→37 | | | |
| | Flow rate | | m³/h | 100 | 120 | 150 | 180 |
| | Pressure drop | | kPa | 65.0 | 54.6 | 57.8 | 50.8 |
| | Connection diameter (JIS) | | A | 100 | 125 | | 150 |
| Power supply | Power | | | 3 phase 380 V 50 Hz | | | |
| | Total current | | A | 11.6 | | 14.8 | |
| | Power capacirty | | kVA | 8.4 | | 11.0 | |
| Fuel System | Gas connection diameter | | A | 50 | | | |
| | Gas Consumption | Cooling | kW | 244 | 293 | 366 | 439 |
| | | Heating | kW | 244 | 293 | 366 | 439 |
| Dimension | Length (L) | | mm | 2,970 | 2,970 | 3,780 | 3,800 |
| | Width (W) | | mm | 1,880 | 1,960 | 1,950 | 1,990 |
| | Height (H) | | mm | 1,930 | 2,000 | 1,970 | 2,020 |
| | Tube extracting space | | mm | 2,360 | 2,380 | 3,410 | 3,430 |
| Weight | Operating weight | | ton | 4.7 | 5.3 | 6.3 | 7.0 |
| | Total shipping weight | | ton | 4.2 | 4.7 | 5.6 | 6.2 |
| Shipping method | | | | 1 piece | | | |
| Holding water amount | | Chilled/Hot water | L | 160 | 195 | 210 | 260 |
| | | Cooling water | L | 280 | 355 | 400 | 500 |

| Model Name | QBW-CP***FG | | | | QCW-CP***FG | | QDW-CP***FG | | QEW-CP***FG | | |
|---|---|---|---|---|---|---|---|---|---|---|---|
| | 210 | 240 | 280 | 320 | 360 | 400 | 450 | 500 | 560 | 630 | 700 |
| Cooling capacity kW | 738 | 844 | 985 | 1,125 | 1,266 | 1,407 | 1,582 | 1,758 | 1,969 | 2,215 | 2,461 |
| Cooling capacity USRT | 210 | 240 | 280 | 320 | 360 | 400 | 450 | 500 | 560 | 630 | 700 |
| Heating capacity kW | 494 | 565 | 659 | 753 | 847 | 941 | 1,059 | 1,177 | 1,318 | 1,483 | 1,647 |
| Heating capacity kcal/h | 425,040 | 485,760 | 566,720 | 647,680 | 728,640 | 809,600 | 910,800 | 1,012,000 | 1,133,440 | 1,275,120 | 1,416,800 |
| Chilled water Temperature (Inlet→Outlet) °C | 12→7 | | | | | | | | | | |
| Chilled water Flow rate m³/h | 127 | 145 | 169 | 194 | 218 | 242 | 272 | 302 | 339 | 381 | 423 |
| Chilled water Pressure drop kPa | 36.5 | 37.7 | 75.0 | 76.1 | 77.5 | 78.4 | 44.9 | 45.4 | 104.4 | 47.3 | 61.3 |
| Chilled water Connection diameter (JIS) A | 125 | | 150 | | | | 200 | | | | |
| Hot water Temperature (Inlet→Outlet) °C | 56.7→60 | | | | | | | | | | |
| Hot water Flow rate m³/h | 127 | 145 | 169 | 194 | 218 | 242 | 272 | 302 | 339 | 381 | 423 |
| Hot water Pressure drop kPa | 36.5 | 37.7 | 75.0 | 76.1 | 77.5 | 78.4 | 44.9 | 45.4 | 104.4 | 47.3 | 61.3 |
| Hot water Connection diameter (JIS) A | 125 | | 150 | | | | 200 | | | | |
| Cooling water Temperature (Inlet→Outlet) °C | 32→37 | | | | | | | | | | |
| Cooling water Flow rate m³/h | 210 | 240 | 280 | 320 | 360 | 400 | 450 | 500 | 560 | 630 | 700 |
| Cooling water Pressure drop kPa | 56.5 | 64.1 | 82.8 | 87.3 | 77.0 | 82.8 | 107.9 | 111.6 | 90.9 | 114.1 | 137.0 |
| Cooling water Connection diameter (JIS) A | 150 | | 200 | | | | 250 | | 300 | | |
| Power supply Power | 3 phase 380 V 50 Hz | | | | | | | | | | |
| Power supply Total current A | 17.9 | 19.7 | | 22.0 | 21.9 | 23.3 | | | 33.5 | | 37.1 |
| Power supply Power capacirty kVA | 13.6 | 15.1 | | 17.0 | 16.9 | 18.0 | | | 26.4 | | 29.3 |
| Fuel System Gas connection diameter A | 100 | | | | | | | | 50 | | |
| Fuel System Gas Consumption Cooling kW | 512 | 585 | 683 | 780 | 879 | 976 | 1,098 | 1,220 | 1,367 | 1,537 | 1,707 |
| Fuel System Gas Consumption Heating kW | 512 | 585 | 683 | 780 | 879 | 976 | 1,098 | 1,220 | 1,367 | 1,537 | 1,707 |
| Dimension Length (L) mm | 3,800 | | 4,870 | | | | 5,960 | | 5,520 | 6,020 | 6,540 |
| Dimension Width (W) mm | 2,300 | | 2,330 | | 2,530 | | 2,590 | | 2,930 | | |
| Dimension Height (H) mm | 2,340 | | | | 2,570 | | 2,610 | | 2,930 | | |
| Dimension Tube extracting space mm | 3,440 | | 4,510 | | 4,450 | | 5,540 | | 5,040 | 5,540 | 6,060 |
| Weight Operating weight ton | 9.6 | 10.0 | 12.0 | 12.6 | 15.0 | 15.6 | 18.9 | 19.6 | 22.9 | 24.8 | 26.5 |
| Weight Total shipping weight ton | 8.6 | 8.9 | 10.7 | 11.2 | 13.3 | 13.8 | 16.8 | 17.3 | 20.1 | 21.7 | 23.2 |
| Shipping method | 1 piece | | | | | | | | | | |
| Holding water amount Chilled/Hot water L | 380 | 415 | 490 | 535 | 635 | 680 | 790 | 850 | 910 | 990 | 1,070 |
| Holding water amount Cooling water L | 585 | 640 | 750 | 820 | 1,005 | 1,080 | 1,265 | 1,360 | 1,880 | 2,040 | 2,230 |

Note
(1) 1 USRT=3.52 kW (3024 kcal/h)
(2) Standard chilled water inlet and outlet temperature is 12°C→7°C. (Standard temperature differential is 5°C)
(3) Standard hot water inlet and outlet temperature is 56.7°C→60°C.
(4) Standard cooling water inlet and outlet temperature is 32°C→37°C. (Standard temperature differential is 5°C)
(5) Pressure drop unit conversion (1 kPa=0.102 mAq)
(6) Max. working pressure of chilled water, hot water and cooling water is 784 kPa (8 kg/cm²G)
(7) Above gas fired fuel connection diameter shows when the gas supply pressure is 1.96 kPa (200 mAq) (100~500 RT), 98 kPa (10,000 mmAq) (560~700 RT)
(8) Fouling factor of chilled water and cooling water are in accordance with JIS B8622-2016.
(9) Chiller performance tolerance is in accordance with JIS B8622-2016.
(10) Above figures are subject to change without notice.

## SPECIFICATION

# GAS/DIESEL OIL DUAL FUEL FIRED ABSORPTION CHILLER/HEATER CP TYPE (High Efficiency Type)

| | | | | QAW-CP***FC | QBW-CP***FC | | | |
|---|---|---|---|---|---|---|---|---|
| | | | Model Name | 180 | 210 | 240 | 280 | 320 |
| Cooling capacity | | | kW | 633 | 738 | 844 | 985 | 1,125 |
| Cooling capacity | | | USRT | 180 | 210 | 240 | 280 | 320 |
| Heating capacity | | | kW | 421 | 491 | 561 | 655 | 748 |
| Heating capacity | | | kcal/h | 361,980 | 422,310 | 482,640 | 563,080 | 643,520 |
| Chilled water | Temperature (Inlet→Outlet) | | °C | 12→7 | | | | |
| Chilled water | Flow rate | | m³/h | 109 | 127 | 145 | 169 | 194 |
| Chilled water | Pressure drop | | kPa | 35.9 | 36.5 | 37.7 | 75.0 | 76.1 |
| Chilled water | Connection diameter (JIS) | | A | 125 | | | 150 | |
| Hot water | Temperature (Inlet→Outlet) | | °C | 56.7→60 | | | | |
| Hot water | Flow rate | | m³/h | 109 | 127 | 145 | 169 | 194 |
| Hot water | Pressure drop | | kPa | 35.9 | 36.5 | 37.7 | 75.0 | 76.1 |
| Hot water | Connection diameter (JIS) | | A | 125 | | | 150 | |
| Cooling water | Temperature (Inlet→Outlet) | | °C | 32→37 | | | | |
| Cooling water | Flow rate | | m³/h | 180 | 210 | 240 | 280 | 320 |
| Cooling water | Pressure drop | | kPa | 70.6 | 76.4 | 84.2 | 78.2 | 82.7 |
| Cooling water | Connection diameter (JIS) | | A | 150 | | | 200 | |
| Power supply | Power | | | 3 phases, 380 V, 50 Hz | | | | |
| Power supply | Total current (50/60Hz) | | A | 18.1 | 19.9 | 21.7 | 21.7 | 25.4 |
| Power supply | Power capacirty (50/60Hz) | | kVA | 11.8 | 13.3 | 14.7 | 14.7 | 17.8 |
| Fuel System | Fuel connection diameter | Gas | A | 50 | 100 | | | |
| Fuel System | Fuel connection diameter | Diesel oil | A | 15 x2 | | | | |
| Fuel System | Gas Consumption | Cooling: LHV gas calorific value | kW | 444 | 519 | 593 | 692 | 791 |
| Fuel System | Gas Consumption | Heating: LHV gas calorific value | kW | 444 | 519 | 593 | 692 | 791 |
| Fuel System | Diesel oil consumption | Cooling | L/h | 43.9 | 51.1 | 58.5 | 68.2 | 77.9 |
| Fuel System | Diesel oil consumption | Heating | L/h | 44.4 | 51.8 | 59.2 | 69.1 | 79.0 |
| Dimension | Length (L) | | mm | 3,780 | 3,800 | | 4,970 | 5,000 |
| Dimension | Width (W) | | mm | 2,240 | 2,460 | | | |
| Dimension | Height (H) | | mm | 2,280 | 2,340 | | 2,360 | |
| Dimension | Tube extracting space | | mm | 3,430 | 3,440 | | 4,510 | |
| Weight | Operating weight | | ton | 8.0 | 10.2 | 10.5 | 12.5 | 13.3 |
| Weight | Total shipping weight | | ton | 7.2 | 9.2 | 9.4 | 11.2 | 11.9 |
| Shipping method | | | | 1 piece | | | | |
| Holding water amount | Chilled/Hot water | | L | 280 | 380 | 415 | 490 | 535 |
| Holding water amount | Cooling water | | L | 500 | 610 | 670 | 770 | 840 |

| QCW-CP***FC | | QDW-CP***FC | | QEW-CP***FC | | |
|---|---|---|---|---|---|---|
| 360 | 400 | 450 | 500 | 560 | 630 | 700 |
| 1,266 | 1,407 | 1,582 | 1,758 | 1,969 | 2,215 | 2,461 |
| 360 | 400 | 450 | 500 | 560 | 630 | 700 |
| 842 | 935 | 1,052 | 1,169 | 1,309 | 1,473 | 1,637 |
| 723,960 | 804,400 | 904,950 | 1,005,500 | 1,126,160 | 1,266,930 | 1,407,700 |
| 12→7 | | | | | | |
| 218 | 242 | 272 | 302 | 339 | 381 | 423 |
| 77.5 | 78.4 | 44.9 | 45.4 | 104.4 | 47.3 | 61.3 |
| 150 | | 200 | | | | |
| 56.7→60 | | | | | | |
| 218 | 242 | 272 | 302 | 339 | 381 | 423 |
| 77.5 | 78.4 | 44.9 | 45.4 | 104.4 | 47.3 | 61.3 |
| 150 | | 200 | | | | |
| 32→37 | | | | | | |
| 360 | 400 | 450 | 500 | 560 | 630 | 700 |
| 72.3 | 78.2 | 99.5 | 103.2 | 85.7 | 107.4 | 128.2 |
| 200 | | 250 | | 300 | | |
| 3 phases, 380 V, 50 Hz | | | | | | |
| 27.3 | | 29.9 | | 41.0 | | 45.2 |
| 19.4 | | 21.5 | | 30.6 | | 34.1 |
| 100 | | 50 | | | | |
| 20 x2 | | | | | | 25 x2 |
| 890 | 988 | 1,112 | 1,236 | 1,384 | 1,557 | 1,730 |
| 890 | 988 | 1,112 | 1,236 | 1,384 | 1,557 | 1,730 |
| 87.7 | 97.5 | 109.6 | 121.8 | 136.4 | 153.4 | 170.5 |
| 88.9 | 98.7 | 111.0 | 123.4 | 138.2 | 155.5 | 172.8 |
| 4,900 | | 5,980 | | 5,530 | 6,020 | 6,550 |
| 2,740 | | 2,710 | 2,760 | 3,030 | 3,200 | |
| 2,620 | | 2,710 | 2,750 | 2,980 | 3,000 | 3,100 |
| 4,450 | | 5,540 | | 5,040 | 5,540 | 6,060 |
| 16.5 | 17.0 | 19.4 | 20.8 | 25.5 | 27.6 | 29.9 |
| 14.7 | 15.1 | 17.3 | 18.5 | 22.5 | 24.3 | 26.4 |
| 1 piece | | | | | | |
| 635 | 680 | 790 | 850 | 910 | 990 | 1,070 |
| 1,100 | 1,180 | 1,290 | 1,390 | 2,060 | 2,230 | 2,420 |

Note
(1) 1 USRT=3.52 kW (3024 kcal/h)
(2) Standard chilled water inlet and outlet temperature is 12°C→7°C. (Standard temperature differential is 5°C)
(3) Standard hot water inlet and outlet temperature is 56.7°C→60°C.
(4) Standard cooling water inlet and outlet temperature is 32°C→37°C. (Standard temperature differential is 5°C)
(5) Pressure drop unit conversion (1 kPa=0.102 mAq)
(6) Max. working pressure of chilled water, hot water and cooling water is 784 kPa (8 kg/cm²G)
(7) Above gas fired fuel connection diameter shows when the gas supply pressure is 1.96 kPa (200 mAq) (180~400 RT), 98 kPa (10,000 mmAq) (450~700 RT)
(8) Calorific value of diesel oil is calculated based on (HCV) 46,046kJ/kg, (LCV) 43,256kJ/kg. Specific gravity of diesel oil is considered as 0.846.
(9) Fouling factor of chilled water and cooling water are in accordance with JIS B8622-2016.
(10) Chiller performance tolerance is in accordance with JIS B8622-2016.
(11) Above figures are subject to change without notice.

## SPECIFICATION

# GAS FIRED ABSORPTION CHILLER/HEATER R TYPE (Compact Type)

| | | | | | QAW-R***FG | | | | QBW-R***FG | |
|---|---|---|---|---|---|---|---|---|---|---|
| Model Name | | | | | 100 | 120 | 150 | 180 | 210 | 240 |
| Cooling capacity | | | | kW | 352 | 422 | 527 | 633 | 738 | 844 |
| | | | | USRT | 100 | 120 | 150 | 180 | 210 | 240 |
| Heating capacity | | | | kW | 246 | 296 | 369 | 443 | 517 | 591 |
| | | | | kcal/h | 211,800 | 254,160 | 317,700 | 381,240 | 444,780 | 508,320 |
| Chilled water | Temperature (Inlet→Outlet) | | | °C | 12→7 | | | | | |
| | Flow rate | | | m³/h | 60.5 | 72.6 | 90.7 | 109 | 127 | 145 |
| | Pressure drop | | | kPa | 40.6 | 41.0 | 54.6 | 56.5 | 53.6 | 54.4 |
| | Connection diameter (JIS) | | | A | 100 | | | | 125 | |
| Hot water | Temperature (Inlet→Outlet) | | | °C | 56.5→60 | | | | | |
| | Flow rate | | | m³/h | 60.5 | 72.6 | 90.7 | 109 | 127 | 145 |
| | Pressure drop | | | kPa | 40.6 | 41.0 | 54.6 | 56.5 | 53.6 | 54.4 |
| | Connection diameter (JIS) | | | A | 100 | | | | 125 | |
| Cooling water | Temperature (Inlet→Outlet) | | | °C | 32→37.1 | | | | | |
| | Flow rate | | | m³/h | 100 | 120 | 150 | 180 | 210 | 240 |
| | Pressure drop | | | kPa | 35.6 | 40.6 | 61.1 | 72.2 | 59.9 | 67.5 |
| | Connection diameter (JIS) | | | A | 125 | | | | 150 | |
| Power supply | Electric power supply | | | | 3 phase 380 V 50 Hz | | | | | |
| | Total electric current | | | A | 12.2 | | 15.5 | | 17.0 | |
| | Power capacirty (50/60Hz) | | | kVA | 8.9 | | 11.6 | | 12.8 | |
| Fuel System | Gas connection diameter | | | A | 50 | | | | 100 | |
| | Gas Consumption | Cooling | LHV gas calorific value | kW | 264 | 318 | 397 | 475 | 555 | 634 |
| | | Heating | LHV gas calorific value | kW | 264 | 318 | 397 | 475 | 555 | 634 |
| Dimension | Length (L) | | | mm | 2,770 | | 3,750 | | 3,800 | |
| | Width (W) | | | mm | 1,640 | | 1,680 | | 1,930 | |
| | Height (H) | | | mm | 1,890 | | 1,950 | | 2,160 | |
| | Tube extracting space | | | mm | 2,390 | | 3,410 | | 3,450 | |
| Weight | Operating weight | | | ton | 4.6 | 4.9 | 5.9 | 6.3 | 7.9 | 8.2 |
| | Total shipping weight | | | ton | 4.1 | 4.3 | 5.3 | 5.6 | 7.0 | 7.3 |
| Shipping method | | | | | 1 piece | | | | | |
| Holding water amount | Chilled/Hot water | | | L | 140 | 160 | 190 | 210 | 270 | 290 |
| | Cooling water | | | L | 330 | 360 | 410 | 460 | 580 | 630 |

| QBW-R***FG | | QCW-R***FG | | QDW-R***FG | | QEW-R***FG | | | QFW-R***FG | |
|---|---|---|---|---|---|---|---|---|---|---|
| 280 | 320 | 360 | 400 | 450 | 500 | 560 | 630 | 700 | 800 | 900 |
| 985 | 1,125 | 1,266 | 1,407 | 1,582 | 1,758 | 1,969 | 2,215 | 2,461 | 2,813 | 3,165 |
| 280 | 320 | 360 | 400 | 450 | 500 | 560 | 630 | 700 | 800 | 900 |
| 690 | 788 | 887 | 985 | 1,108 | 1,231 | 1,379 | 1,552 | 1,724 | 1,970 | 2,217 |
| 593,040 | 677,760 | 762,480 | 847,200 | 953,100 | 1,059,000 | 1,186,080 | 1,334,340 | 1,482,600 | 1,694,400 | 1,906,200 |
| 12→7 | | | | | | | | | | |
| 169 | 194 | 218 | 242 | 272 | 302 | 339 | 381 | 423 | 484 | 544 |
| 37.5 | 38.4 | 39.6 | 40.8 | 37.1 | 37.8 | 38.6 | 52.9 | 69.8 | 51.4 | 67.9 |
| 150 | | | | 200 | | | | | 250 | |
| 56.5→60 | | | | | | | | | | |
| 169 | 194 | 218 | 242 | 272 | 302 | 339 | 381 | 423 | 484 | 544 |
| 37.5 | 38.4 | 39.6 | 40.8 | 37.1 | 37.8 | 38.6 | 52.9 | 69.8 | 51.4 | 67.9 |
| 150 | | | | 200 | | | | | 250 | |
| 32→37.1 | | | | | | | | | | |
| 280 | 320 | 360 | 400 | 450 | 500 | 560 | 630 | 700 | 800 | 900 |
| 120.0 | 133.7 | 84.4 | 90.2 | 98.3 | 107.2 | 85.1 | 114.5 | 144.1 | 102.9 | 130.0 |
| 200 | | | | 250 | | 300 | | | 350 | |
| 3 phase 380 V 50 Hz | | | | | | | | | | |
| 20.2 | | 30.3 | | 32.9 | | 39.4 | | | 45.4 | 49.3 |
| 15.5 | | 23.8 | | | 25.9 | 31.3 | | | 36.2 | 39.4 |
| 100 | | | | | | 50 | | | | |
| 740 | 846 | 952 | 1,057 | 1,189 | 1,322 | 1,480 | 1,665 | 1,850 | 2,114 | 2,379 |
| 740 | 846 | 952 | 1,057 | 1,189 | 1,322 | 1,480 | 1,665 | 1,850 | 2,114 | 2,379 |
| 4,840 | | 4,850 | | 4,850 | | 5,050 | 5,590 | 6,090 | 5,760 | 6,190 |
| 2,040 | | 2,190 | | 2,320 | | 2,610 | 2,990 | | 3,200 | |
| 2,160 | | 2,370 | | 2,600 | | 2,850 | 2,900 | | 3,330 | |
| 4,470 | | 4,500 | | | | 4,600 | 5,200 | 5,700 | 5,200 | 5,700 |
| 9.6 | 10.2 | 12.3 | 12.5 | 15.0 | 15.4 | 19.5 | 22.8 | 24.2 | 29.4 | 31.4 |
| 8.6 | 9.1 | 11.0 | 11.1 | 13.3 | 13.6 | 17.1 | 20.2 | 21.4 | 25.7 | 27.4 |
| 1 piece | | | | | | | | | | |
| 330 | 370 | 410 | 450 | 530 | 570 | 690 | 750 | 820 | 1,040 | 1,130 |
| 700 | 760 | 920 | 990 | 1,190 | 1,270 | 1,680 | 1,810 | 1,950 | 2,630 | 2,830 |

Note
(1) 1 USRT=3.52 kW (3024 kcal/h)
(2) Standard chilled water inlet and outlet temperature is 12°C→7°C. (Standard temperature differential is 5°C)
(3) Standard hot water inlet and outlet temperature is 56.5°C→60°C.
(4) Standard cooling water inlet and outlet temperature is 32°C→37.1°C. (Standard temperature differential is 5.1°C)
(5) Pressure drop unit conversion (1 kPa=0.102 mAq)
(6) Max. working pressure of chilled water, hot water and cooling water is 784 kPa (8 kg/cm²G)
(7) Above gas fired fuel connection diameter shows when the gas supply pressure is 1.96 kPa (200 mAq) (100~500 RT), 98 kPa (10,000 mmAq) (560~900 RT)
(8) Fouling factor of chilled water and cooling water are in accordance with JIS B8622-2016.
(9) Chiller performance tolerance is in accordance with JIS B8622-2016.
(10) Above figures are subject to change without notice.

## SPECIFICATION

# GAS/OIL DUAL FUEL FIRED ABSORPTION CHILLER/HEATER R TYPE (Compact Type)

| | | | | | QBW-R***FC | | | | QCW-R***FC | | QDW-R***FC | | QEW-R***FC | | | QFW-R***FC |
|---|---|---|---|---|---|---|---|---|---|---|---|---|---|---|---|---|
| Model Name | | | | | 210 | 240 | 280 | 320 | 360 | 400 | 450 | 500 | 560 | 630 | 700 | 800 |
| Cooling capacity | | | | kW | 738 | 844 | 985 | 1,125 | 1,266 | 1,407 | 1,582 | 1,758 | 1,969 | 2,215 | 2,461 | 2,813 |
| | | | | USRT | 210 | 240 | 280 | 320 | 360 | 400 | 450 | 500 | 560 | 630 | 700 | 800 |
| Heating capacity | | | | kW | 548 | 627 | 731 | 836 | 941 | 1,059 | 1,177 | 1,324 | 1,471 | 1,646 | 1,853 | 2,090 |
| | | | | kcal/h | 471,690 | 539,070 | 628,920 | 718,760 | 809,260 | 910,740 | 1,012,220 | 1,138,640 | 1,265,060 | 1,415,560 | 1,593,580 | 1,797,400 |
| Chilled water | Temperature (Inlet→Outlet) | | | °C | 12→7 | | | | 12→7 | | | | | | | |
| | Flow rate | | | m³/h | 127 | 145 | 169 | 194 | 218 | 242 | 272 | 302 | 339 | 381 | 423 | 484 |
| | Pressure drop | | | kPa | 53.6 | 54.4 | 37.5 | 38.4 | 39.6 | 40.8 | 37.1 | 37.8 | 38.6 | 52.9 | 69.8 | 51.4 |
| | Connection diameter (JIS) | | | A | 125 | | 150 | | 150 | | 200 | | | | | 250 |
| Hot water | Temperature (Inlet→Outlet) | | | °C | 56.5→60 | | | | 56.5→60 | | | | | | | |
| | Flow rate | | | m³/h | 127 | 145 | 169 | 194 | 218 | 242 | 272 | 302 | 339 | 381 | 423 | 484 |
| | Pressure drop | | | kPa | 53.6 | 54.4 | 37.5 | 38.4 | 39.6 | 40.8 | 37.1 | 37.8 | 38.6 | 52.9 | 69.8 | 51.4 |
| | Connection diameter (JIS) | | | A | 125 | | 150 | | 150 | | 200 | | | | | 250 |
| Cooling water | Temperature (Inlet→Outlet) | | | °C | 32→37.1 | | | | 32→37.1 | | | | | | | |
| | Flow rate | | | m³/h | 210 | 240 | 280 | 320 | 360 | 400 | 450 | 500 | 560 | 630 | 700 | 800 |
| | Pressure drop | | | kPa | 59.9 | 67.5 | 120.0 | 133.7 | 84.4 | 90.2 | 98.3 | 107.2 | 85.1 | 114.5 | 144.1 | 121.7 |
| | Connection diameter (JIS) | | | A | 150 | | 200 | | 200 | | 250 | | 300 | | | 350 |
| Power supply | Electric power supply | | | | 3 phase 380 V 50 Hz | | | | 3 phase 380 V 50 Hz | | | | | | | |
| | Total electric current | | | A | 17.7 | | 22.5 | | 29.7 | 32.6 | | 36.4 | 39.4 | | | 48.2 |
| | Power capacirty (50/60Hz) | | | kVA | 12.4 | | 16.4 | | 23.3 | 25.6 | | 28.8 | 31.3 | | | 38.5 |
| Fuel system | Fuel connection diameter | | Gas | A | 100 | | | | 100 | | | 50 | | | | |
| | | | Diesel | A | 15 x 2 | | | | 15 x 2 | 20 x 2 | | | | 25 x 2 | | |
| | Gas Consumption | Cooling | LHV gas calorific value | kW | 555 | 634 | 740 | 846 | 952 | 1,057 | 1,189 | 1,322 | 1,480 | 1,665 | 1,850 | 2,114 |
| | | Heating | LHV gas calorific value | kW | 588 | 673 | 785 | 897 | 1,010 | 1,136 | 1,263 | 1,421 | 1,578 | 1,766 | 1,988 | 2,242 |
| | Diesel oil consumption | | Cooling | L/h | 54.6 | 62.4 | 72.9 | 83.2 | 93.6 | 104.1 | 117.0 | 130.0 | 145.6 | 163.8 | 182.0 | 208.1 |
| | | | Heating | L/h | 57.8 | 66.2 | 77.2 | 88.2 | 99.3 | 111.8 | 124.2 | 139.8 | 155.3 | 173.7 | 195.6 | 220.6 |
| Dimension | Length | | | (L) mm | 3,900 | | 4,770 | 5,220 | 4,950 | | 4,870 | 4,950 | 5,350 | 5,590 | 6,090 | 6,100 |
| | Width | | | (W) mm | 2,270 | | 2,350 | 2,390 | 2,480 | | 2,670 | 2,720 | 3,030 | 3,090 | | 3,350 |
| | Height | | | (H) mm | 2,150 | | 2,200 | | 2,350 | | 2,600 | | 2,850 | 2,980 | | 3,330 |
| | Tube extracting space | | | mm | 3,450 | | 4,470 | | 4,500 | | | | 4,600 | 5,200 | 5,700 | 5,200 |
| Weight | Operating weight | | | ton | 8.2 | 8.7 | 10.0 | 11.2 | 12.9 | 13.5 | 15.7 | 16.5 | 20.7 | 23.8 | 25.4 | 30.3 |
| | Total shipping weight | | | ton | 7.4 | 7.8 | 9.1 | 10.2 | 11.6 | 12.1 | 14.0 | 14.7 | 18.3 | 21.2 | 22.6 | 26.6 |
| Shipping method | | | | | 1 piece | | | | 1 piece | | | | | | | 1 piece*(9) |
| Holding water amount | | Chilled/Hot water | | L | 270 | 290 | 330 | 370 | 410 | 450 | 530 | 570 | 690 | 750 | 820 | 1,040 |
| | | Cooling water | | L | 580 | 630 | 700 | 760 | 920 | 990 | 1,190 | 1,270 | 1,680 | 1,810 | 1,950 | 2,630 |

Note
(1) 1 USRT=3.52 kW (3024 kcal/h)
(2) Standard chilled water inlet and outlet temperature is 12°C→7°C. (Standard temperature differential is 5°C)
(3) Standard hot water inlet and outlet temperature is 56.5°C→60°C.
(4) Standard cooling water inlet and outlet temperature is 32°C→37.1°C. (Standard temperature differential is 5.1°C)
(5) Pressure drop unit conversion (1 kPa=0.102 mAq)
(6) Max. working pressure of chilled water, hot water and cooling water is 784 kPa (8 kg/cm$^2$G)
(7) Above gas fired fuel connection diameter shows when the gas supply pressure is 1.96 kPa (200 mAq) (210~500 RT), 98 kPa (10,000 mmAq) (560~800 RT)
(8) Calorific value of diesel oil is calculated based on (HCV) 46,046kJ/kg, (LCV) 43,256kJ/kg. Specific gravity of diesel oil is considered as 0.846.
(9) QFW-R800FC requires sperate shipment of the burner in order to keep the carry-in dimension W3200 or less. Burner shall be assembled at site by the customer.
(10) Fouling factor of chilled water and cooling water are in accordance with JIS B8622-2016.
(11) Chiller performance tolerance is in accordance with JIS B8622-2016.
(12) Above figures are subject to change without notice.

## SCOPE OF ORDER

# GAS FIRED MODEL

| Item | | | Standard | Option |
|---|---|---|---|---|
| Standard | | | JIS B 8622 | No option |
| Chilled water | Chilled water | Temperature | Inlet : 12°C<br>Outlet : 7°C | Outlet : 5°C thru 12°C<br>Temperature difference 3°C thru 10°C |
| | | Flow rate | 0.605 m³/h·RT | Changes depending on chilled water temperature difference (min. 50%) |
| | Max. working pressure | | 0.784 MPa | 1.0 MPaG / 1.6 MPaG |
| | Hydrostatic test pressure | | Max. working press. x 1.5 | No option |
| | Fouling factor | | JIS (0.086 m²K/kW) | Contact Panasonic |
| | Connecting flange | | JIS | ANSI, DIN |
| | Material of tube | | Copper tube | Contact Panasonic |
| | Water quality | | Refer to JRA-GL02E-1994 | No option |
| | Structure of water header | | Removal type | Marine type |
| | Manufacturing standard of water header | | Panasonic Standard | No option |
| Cooling water | Temperature | | Inlet : 32°C<br>Outlet : 37°C (CP type), 37.1°C (R type) | Inlet : 20°C thru 33°C<br>Temperature difference 3°C thru 10°C |
| | Flow rate | | 1.0 m³/h·RT | Within the water flow rate range of each model |
| | Max. working pressure | | 0.784 MPa | 1.0 MPaG / 1.6 MPaG |
| | Hydrostatic test pressure | | Max. working press. x 1.5 | No option |
| | Fouling factor | | JIS (0.086 m²K/kW) | Contact Panasonic |
| | Connecting flange | | JIS | ANSI, DIN |
| | Material of tube | | Copper tube | Contact Panasonic |
| | Water quality | | Refer to JRA-GL02E-1994 | No option |
| | Structure of water header | | Marine type | No option |
| | Manufacturing standard of water header | | Panasonic Standard | No option |
| Fuel | Kind of fuel | | Natural gas | LPG, diesel oil etc.<br>Contact Panasonic |
| | Supply gas pressure | | Refer to catalog data | |
| Electricity | Phase<br>Voltage<br>Frequency | | 3 ø 380 V 50 Hz<br>(Voltage regulation : within ±10%)<br>(Frequency regulation : within ±5%) | 3 ø 200-460 V 50·60 Hz<br>(Voltage regulation : within ±10%)<br>(Frequency regulation : within ±5%) |
| Thermal insulation | | | Insulation by purchaser | Cold surface |
| Shipment | | | 1 section shipment (LiBr charged) | Contact Panasonic |
| Control | Safety functions | | Chilled water freezing protection | Cooling water flow switch |
| | | | Chilled water flow switvh | |
| | | | Cooling water temperature | |
| | | | Generator temperature | |
| | | | Generator pressure | |
| | | | Exhaust gas temperature | |
| | | | Crystallization protection | |
| | | | Motor protection | |
| | Capacity control | | Digital PID control by CHW temp | No option |
| | | | Remote control of CHW/HTW by 4-20 mA | No option |
| | | | Inverter control of #1 & #2 ABS pump | No option |
| | Parts | | Selected by Panasonic | No option |
| Control panel | Painting | | Munsell No. 5Y-7/1 | No option |
| | Indication lamps | | Operation : Green<br>Stop : Orange<br>Alarm : Red | No option |
| | Display | | LED | No option |
| | External terminals<br>(No-voltage normal open contact) | | Operation indication | Contact Panasonic |
| | | | Stop indication | |
| | | | Alarm indication | |
| | | | Answer back indication | |
| | | | Combustion indication | |
| | | | Dilution operation indication | |
| | | | Cooling mode indication | |
| | | | Heating mode indication | |
| | | | Equioment side alarm indication | |
| | | | Pridiction indication | |
| | BMS | | - | (R type) Modbus, LonWorks (CP type) LonWorks |
| | Installation condition | | Indoor type | Outdoor type (Contact panasonic) |
| | Parts | | Selected by Panasonic | No option |
| Electrical wiring and piping | | | Wire : 600V grade polyvinyl chloride-insulated wires | No option |
| | | | Pipe : plica tube (Flexible metal conduits) | No option |
| Installation condition | Installation condition | | Indoor type | Outdoor type (Contact panasonic) |
| | Ambient temperature | | 5°C thru 40°C | No option |
| | Ambient humidity | | Relative humidity : Max 90% at 45°C | No option |
| | Atmosphere | | Be sure the following are not present<br>*Corrosive gas<br>*Explosive gas<br>*Poisonous gas | Contact panasonic |
| Factory test | | | Leak test of vacuum side<br>Leak test of gas train<br>Electric insulation resistance test<br>Dielectric breakdown test<br>Function test of electric circuit | Performance test |



# TYPICAL PIPING DIAGRAM

In order to prevent freezing up of chilled water during dilute operation of the chiller,
continue the operation of the chilled water pumps and air-conditioner until the dilute operation will be completed (shortest 6 minutes).

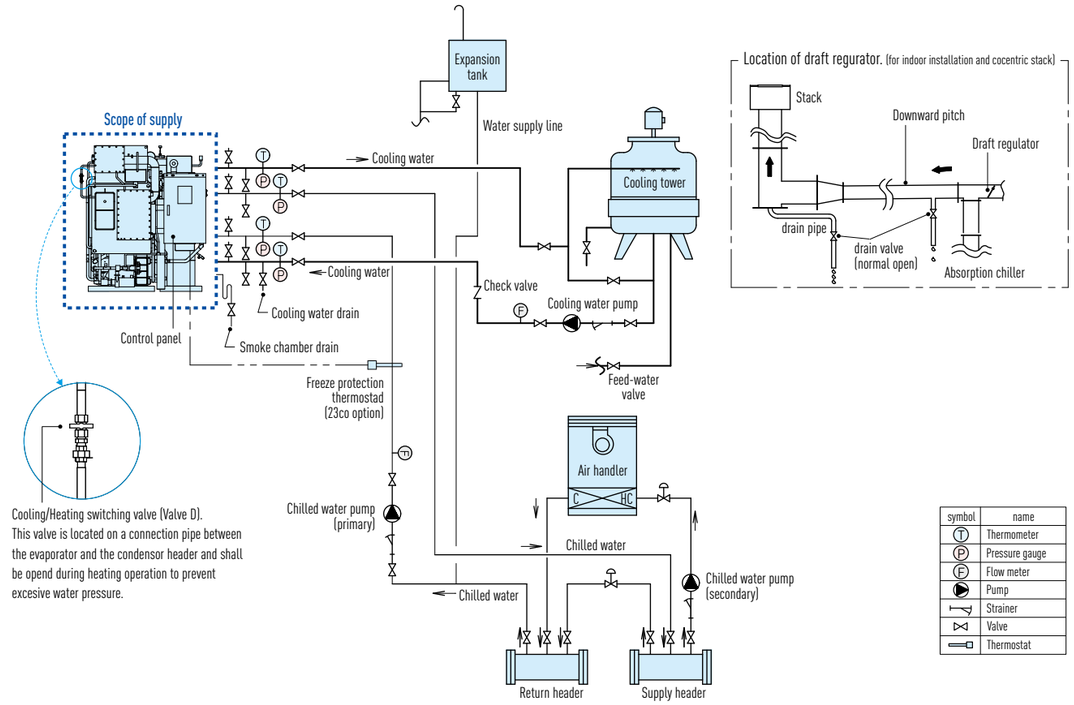


## ⚠ General remarks on piping

1. Out of dash line shall be purchaser's supply.
2. Refer to the over all dimensions and specifications sheet for confirming nozzle location/size.
3. Cooling water flow rate should be constant in the range of 100-120% of the rated value. Chilled/hot water flow rate shall not be less than 50% of the rated value. Otherwise chiller/heater will run down by safety cutout of "Chilled/hot water flow". To keep stable temperature of the leaving chilled water, fluctuation of the chilled water flow rate should be less or equal 20% per 10 minutes. In case of the secondary chilled/hot water pump will be stopped and/or the air handler will be stopped before a dilution operation is completed, the retained water volume of the primary chilled/hot water system be more than 36 liter/RT.
4. Location of chilled/hot water pump, cooling water pump, expansion tank should be designed with static pressure and pump head in mind. Max. working pressure of chilled/hot water and cooling water are indicated on the specification sheet.
5. Cooling water temperature should be controlled in accordance with "Cooling water temperature control".
6. Independent chilled/hot water pump and cooling water pump should be provided to each chiller/heater.
7. In case of a lining pipe is applied to cooling water piping, thermal resistance type shall be selected. Because the cooling water temp in the chiller/heater will reach around 80°C.
8. Quality management of cooling water is necessary. Poor water quality will cause a corrosion and/or scaling problem.
9. Install a 10 mesh strainer in each water pipe.
10. Before connecting pipes, clean the inside of pipes.
11. To prevent water freezing in winter, the freeze protection thermostat(23CO) will be recommended. When discharging the water in the chiller/heater, it has to be discharged from the valve of the chiller/heater pipe/header bottom.
12. Connection with flue pipe and stack. Designed flue temperature is 100°C and it is very possible to have a water condensation.
    1) Flue pipe should be thermally insulated.
    2) Horizontal flue piping should have downward pitch and a drain pipe with a valve. Recommended a drain pipe size is 1 inch or more.
    3) Vertical flue piping should have a drain pipe at the bottom. Recommended a drain pipe size is 1 inch or more.
    4) Flue draft should be 0-49 Pa and a draft regulator is required to stabilize the flue draft.
    5) Flue/stack of chiller/heater should be independent from other equipment such as incinerator, generator, etc.
    6) Stack/exhaust outlet should be located away from cooling tower and/or air intake.
13. To maintain the chiller/heater well, undermentioned equipment should be installed further to the stop valve near the nozzle of chilled/hot, cooling and waste hot water connection. And provide the following.
    1) Fuel flowmeter near the chiller/heater.
    2) Thermometer and pressure gauge near the nozzle of chilled/hot, cooling and waste hot water.
    3) Air vent valve at the highest part of chilled/hot, cooling and waste hot water system.
    4) Drain valve at the lowest part of chilled/hot, cooling and waste hot water in between each nozzle and stop valve. The drain pipe should run to ditch.
    5) drain pipe at the flue chamber that runs to ditch.
    6) 3/2 inch vent and valve in between each nozzle and stop valve for chemical cleaning.
14. Open the cooling/heating switching valve(valve D) during heating operation to release the pressure of cooling water system in the chiller/heater if the cooling water was not discharged.

Note: Valve D doesn't exsit if the degin working pressure of Chilled water header and cooling water header is defference.

# Double Effect Steam Fired Absorption Chiller

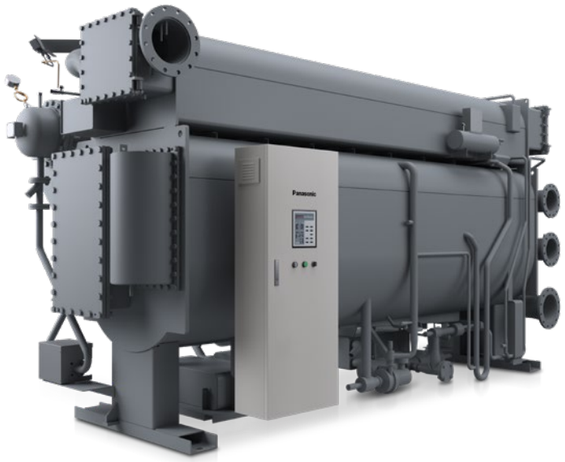

F series

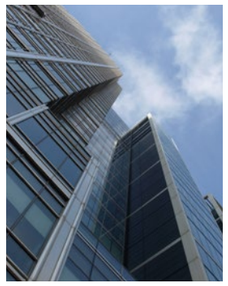

## Ideal energy solution for large-scale facilities

Panasonic F series double-effect steam fired absorption chillers produce chilled water for cooling or process purposes using steam as driving energy.
Panasonic F series absorption chillers use water as refrigerant and Lithium Bromide solution as absorbent and use no CFCs or HCFCs. Also, since an absorption cycle is accomplished without a large motor-compressor drive arrangement, the customer can be assured of quiet and low -vibration operation.
Panasonic F series absorption chillers use steam (standard pressure : 8 kg/cm$^2$G) as a driving energy and use very little electricity. By converting various kinds of exhaust heat into steam, customers can use it as a heat source of absorption chiller and they can realize diversification of energy and save electricity bill for air conditioning.
In addition,
Panasonic F series absorption chillers achieved very high efficiency by adopting various innovative technologies, so customer can enjoy further savings of operation costs.
Panasonic F series absorption chillers are widely used for large-scale facilities like hospital, large commercial buildings, shopping malls and various types of large-scale facilities, and also used for various district cooling projects in combination with cogeneration systems (Gas turbine, Gas engine, etc.).



# FEATURES : DOUBLE EFFECT STEAM FIRED MODEL

## Low steam consumption

Circulation amount of Lithium Bromide solution is optimally controlled by the inverter driven absorbent pump*. Therefore, when the cooling load is 50% or less or when the cooling water inlet temperature drops steam consumption rate would be dramatically improved.

■ Predicted partial load performance curve (F series, steam double effect)

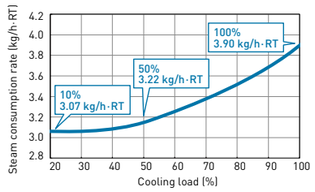


**Conditions**

- Chilled water outlet temperature = 7degC
- Chilled water flow rate = rated value (constant flow rate)
- Cooling water inlet temperature = according to JIS B 8622 2016 standard
- Cooling water flow rate = rated value (constant flow rate)
- Steam supply pressure = 784 kPa

*Above predicted partial load efficiency curve is just for reference and it is not for guarantee.

## High corrosion resistance drain heat exchanger

Stainless steel brazed type plate heat exchanger is used as a steam drain heat exchanger which is highly resistant to corrosion, and it is designed to reduce steam consumption.

## Steam control valve and steam shut off valve (with emergency shut-off function)

Steam control valve and steam shut-off valve are supplied by Panasonic. Steam shut-off valve is designed to shut off steam in an emergency even in the event of a power outage to prevent crystallization in the chiller.

■ Panasonic supplied electric type steam control valve and shut-off valve

>> See page 23 for more details.

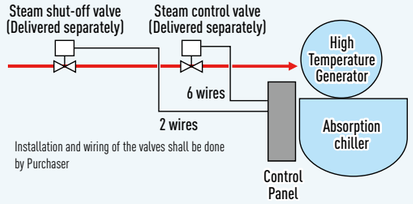


## Cycle flow diagram

■ F series Steam Fired Absorption Chiller

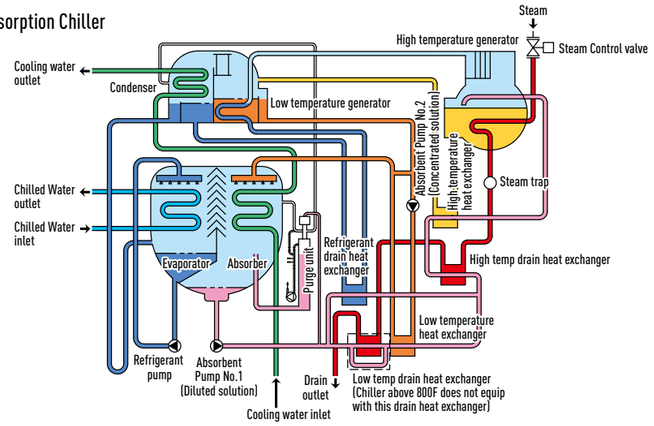

## SPECIFICATION

# DOUBLE EFFECT STEAM FIRED ABSORPTION CHILLER F SERIES

| | | | | QAW-***FS | | | QBW-***FS | | QCW-***FS | |
|---|---|---|---|---|---|---|---|---|---|---|
| | | | Model Name | 100 | 130 | 160 | 200 | 250 | 300 | 360 |
| Cooling capacity | | | kW | 352 | 457 | 563 | 703 | 879 | 1,055 | 1,266 |
| | | | USRT | 100 | 130 | 160 | 200 | 250 | 300 | 360 |
| Chilled water | Temperature (Inlet→Outlet) | | °C | 12→7 | | | | | | |
| | Flow rate | | m³/h | 60.5 | 78.6 | 96.8 | 121 | 151 | 181 | 218 |
| | Pressure drop | | kPa | 52 | 71 | 77 | 67 | 50 | 49 | 58 |
| | Connection diameter (JIS) | | A | 100 | | | 125 | 150 | | |
| Cooling water | Temperature (Inlet→Outlet) | | °C | 32→37.3 | | | | | | |
| | Flow rate | | m³/h | 100 | 130 | 160 | 200 | 250 | 300 | 360 |
| | Pressure drop | | kPa | 33 | 51 | 63 | 46 | 94 | 68 | 84 |
| | Connection diameter (JIS) | | A | 125 | | | 150 | 200 | | |
| Steam | Steam supply pressure | | kPaG | Saturated steam 784 kPa | | | | | | |
| | Steam consumption | | kg/h | 390 | 507 | 624 | 780 | 975 | 1,170 | 1,404 |
| | Connection diameter (JIS) | Steam inlet | A | 50 | | | | 65 | | 80 |
| | | Drain outlet | A | 25 | | | 32 | | | 40 |
| | | Steam control | A | 25 | | | 40 | | | |
| | | Steam shut-off | A | 25 | | | 40 | | | |
| Power supply | Electric power supply | | | 3 phase 380 V 50 Hz | | | | | | |
| | Total electric current | | A | 11.2 | | | 13.7 | | 14.0 | |
| | Power capacity (50/60Hz) | | kVA | 8.6 | | | 10.7 | | 10.9 | |
| Dimension | Length (L) | | mm | 2,645 | 3,665 | | 3,710 | 4,760 | 4,830 | |
| | Width (W) | | mm | 1,490 | | | 1,665 | | 1,770 | |
| | Height (H) | | mm | 2,200 | | | 2,250 | | 2,390 | |
| | Tube extracting space | | mm | 2,400 | 3,400 | | | 4,500 | | |
| Weight | Operating weight | | ton | 4.4 | 5.5 | 5.8 | 7.0 | 8.3 | 10.7 | 11.3 |
| | Total shipping weight | | ton | 3.9 | 5.0 | 5.2 | 6.3 | 7.5 | 9.5 | 10.0 |
| Shipping method | | | | 1 | 1 | 1 | 1 | 1 | 1 | 1 |
| Holding water amount | | Chilled water | L | 130 | 150 | 170 | 240 | 280 | 340 | 360 |
| | | Cooling water | L | 340 | 380 | 420 | 580 | 630 | 890 | 950 |

| QDW-***FS | | QEW-***FS | | | QFW-***FS | | | QGW-***FS | |
|---|---|---|---|---|---|---|---|---|---|
| 400 | 450 | 500 | 560 | 630 | 700 | 800 | 900 | 10X | 12X |
| 1,407 | 1,582 | 1,758 | 1,969 | 2,215 | 2,461 | 2,813 | 3,165 | 3,516 | 4,044 |
| 400 | 450 | 500 | 560 | 630 | 700 | 800 | 900 | 1,000 | 1,150 |
| 12→7 | | | | | | | | | |
| 242 | 272 | 302 | 339 | 381 | 423 | 484 | 545 | 605 | 696 |
| 55 | 48 | 39 | 54 | 72 | 49 | 68 | 91 | 63 | 95 |
| 200 | | | | | 250 | | | 300 | |
| 32→37.3 | | | | | | 32→37.2 | | | |
| 400 | 450 | 500 | 560 | 630 | 700 | 800 | 900 | 1,000 | 1,150 |
| 86 | 94 | 68 | 90 | 120 | 78 | 95 | 126 | 85 | 125 |
| 250 | | 300 | | | 350 | | | 400 | |
| Saturated steam 784 kPa | | | | | | | | | |
| 1,560 | 1,755 | 1,950 | 2,184 | 2,457 | 2,730 | 3,120 | 3,510 | 3,900 | 4,485 |
| 80 | | | 100 | | | 125 | | 150 | |
| 40 | | 50 | | | | 65 | | | |
| 50 | | | | | 65 | | | | 80 |
| 50 | | | | | 65 | | | | 80 |
| 3 phase 380 V 50 Hz | | | | | | | | | |
| 21.1 | | 23.1 | 24.9 | | 25.9 | 25.4 | | 33.1 | 33.1 |
| 16.8 | | 18.4 | 19.9 | | 20.7 | 20.3 | | 26.6 | 26.6 |
| 4,850 | | 5,040 | 5,590 | 6,080 | 5,690 | 6,190 | 6,710 | 6,430 | 7,460 |
| 1,975 | | 2,300 | | | 2,500 | | | 3,000 | |
| 2,600 | | 2,900 | | | 3,330 | | | 3,450 | |
| 4,500 | | 4,600 | 5,100 | 5,600 | 5,200 | 5,700 | 6,200 | 6,000 | 7,000 |
| 13.1 | 13.7 | 17.8 | 19.9 | 21.3 | 25.3 | 27.0 | 28.9 | 34.5 | 38.3 |
| 11.5 | 12.0 | 15.2 | 17.1 | 18.4 | 21.5 | 22.9 | 24.6 | 29.4 | 32.6 |
| 1 | 1 | 1 | 1 | 1 | 1 | 1 | 1 | 1*(6) | 1*(6) |
| 460 | 480 | 650 | 710 | 770 | 990 | 1,055 | 1,130 | 1,406 | 1,607 |
| 1,110 | 1,190 | 1,870 | 2,010 | 2,140 | 2,790 | 2,962 | 3,144 | 3,667 | 4,106 |

Note
(1) 1 USRT=3.52 kW (3024 kcal/h)
(2) Standard chilled water inlet and outlet temperature is 12°C→7°C. (Standard temperature differential is 5°C)
(3) Standard cooling water inlet and outlet temperature is 32°C→37.3°C. (QGW-HS10XFS and QGW-HS12XFS is 32°C→37.2°C)
(4) Pressure drop unit conversion (1 kPa=0.102 mAq)
(5) Max. working pressure of chilled water and cooling water is 784 kPa (8 kg/cm²G)
(6) QGW-10XFS and QGW-12XFS is dry shipment and LiBr solution shall be sent seperately with the absorption chiller. (Shipping method depends on the destination)
(7) Standard steam supply pressure is 784 kPa (8kg/cm²G)
(8) Fouling factor of chilled water and cooling water are in accordance with JIS B8622-2016.
(9) Chiller performance tolerance is in accordance with JIS B8622-2016.
(10) Above figures are subject to change without notice.

## SCOPE OF ORDER

# DOUBLE EFFECT STEAM FIRED MODEL

| Item | | Standard | Option |
|---|---|---|---|
| Standard | | JIS B 8622 | No option |
| Chilled water | Temperature | Inlet : 12°C<br>Outlet : 7°C | Outlet : 5°C thru 12°C<br>Temperature difference 3°C thru 10°C |
| | Flow rate | 0.605 $m^3$/h·RT | Changes depending on chilled water temperature difference (min. 50%) |
| | Max. working pressure | 0.784 MPa | 1.0 MPaG / 1.6 MPaG |
| | Hydrostatic test pressure | Max. working press. x 1.5 | No option |
| | Fouling factor | JIS (0.086 $m^2$K/kW) | Contact Panasonic |
| | Connecting flange | JIS | ANSI, DIN |
| | Material of tube | Copper tube | Contact Panasonic |
| | Water quality | Refer to JRA-GL02E-1994 | No option |
| | Structure of water header | Removal type | Marine type |
| | Manufacturing standard of water header | Panasonic Standard | No option |
| Cooling water | Temperature | Inlet : 32°C<br>Outlet : 37.3°C | Inlet : 20°C thru 33°C<br>Temperature difference 3°C thru 10°C |
| | Flow rate | 1.0 $m^3$/h·RT | Within the water flow rate range of each model |
| | Max. working pressure | 0.784 MPa | 1.0 MPaG / 1.6 MPaG |
| | Hydrostatic test pressure | Max. working press. x 1.5 | No option |
| | Fouling factor | JIS (0.086 $m^2$K/kW) | Contact Panasonic |
| | Connecting flange | JIS | ANSI, DIN |
| | Material of tube | Copper tube | Contact Panasonic |
| | Water quality | Refer to JRA-GL02E-1994 | No option |
| | Structure of water header | Marine type | No option |
| | Manufacturing standard of water header | Panasonic Standard | No option |
| Steam | Supply pressure at chiller header | 784 kPaG | 490 kPaG thru 882 kPaG |
| | Super heat | 0 thru +10°C | Contact Panasonic |
| | Steam consumption | 3.9 kg/h·RT | Changes depend on the specification |
| | Max. working pressure | 1,000 kPaG | No option |
| | Hydrostatic test pressure | Max. working press. x 1.5 | No option |
| | Material of tube | 9/1 Copper nickel tube | Contact Panasonic |
| | Steam quality | Refer to JIS B 8223 | No option |
| | Manufacturing standard of water header | Panasonic Standard | No option |
| Electricity | Phase<br>Voltage<br>Frequency | 3 ø 380 V 50 Hz<br>(Voltage regulation : within ±10%)<br>(Frequency regulation : within ±5%) | 3 ø 200-460 V 50·60 Hz<br>(Voltage regulation : within ±10%)<br>(Frequency regulation : within ±5%) |
| Thermal insulation | | Insulation by purchaser | Cold surface |
| Shipment | | 1 section shipment (LiBr charged) | Contact Panasonic |
| Control | Safety functions | Chilled water freezing protection | Cooling water flow switch |
| | | Chilled water flow switch | |
| | | Cooling water temperature (load limitation) | |
| | | Generator temperature | |
| | | Generator pressure | |
| | | Crystallization protection | |
| | | Motor protection | |
| | Capacity control | Digital PID control by CHW temp | No option |
| | | Remote control of CHW by 4-20 mA | No option |
| | | Inverter control of #1 ABS pump | No option |
| | Parts | Selected by Panasonic | No option |
| Control panel | Painting | Munsell No. 5Y-7/1 | No option |
| | Indication lamps | Operation : Green<br>Stop : Orange<br>Alarm : Red | No option |
| | Display | LED | No option |
| | External terminals<br>(No-voltage normal open contact) | Operation indication | Contact Panasonic |
| | | Stop indication | |
| | | Alarm indication | |
| | | Answer back indication | |
| | | Cooling mode indication | |
| | | Purge alarm indication | |
| | Installation condition | Indoor type | Outdoor type (Contact panasonic) |
| | BMS | - | LonWorks |
| | Parts | Selected by Panasonic | No option |
| Electrical wiring and piping | | Wire : 600 V grade polyvinyl chloride-insulated wires | No option |
| | | Pipe : plica tube (Flexible metal conduits) | No option |
| Installation condition | Installation condition | Indoor type | Outdoor type (Contact panasonic) |
| | Ambient temperature | 5°C thru 40°C | No option |
| | Ambient humidity | Relative humidity : Max 90% at 45°C | No option |
| | Atmosphere | Be sure the following are not present<br>*Corrosive gas<br>*Explosive gas<br>*Poisonous gas | Contact panasonic |
| Factory test | | Leak test of vacuum side<br>Electric insulation resistance test<br>Dielectric breakdown test<br>Function test of electric circuit | Performance test |



# TYPICAL PIPING DIAGRAM

In order to prevent freezing up of chilled water during dilute operation of the chiller,
continue the operation of the chilled water pumps and air-conditioner until the dilute operation will be completed (shortest 6 minutes).

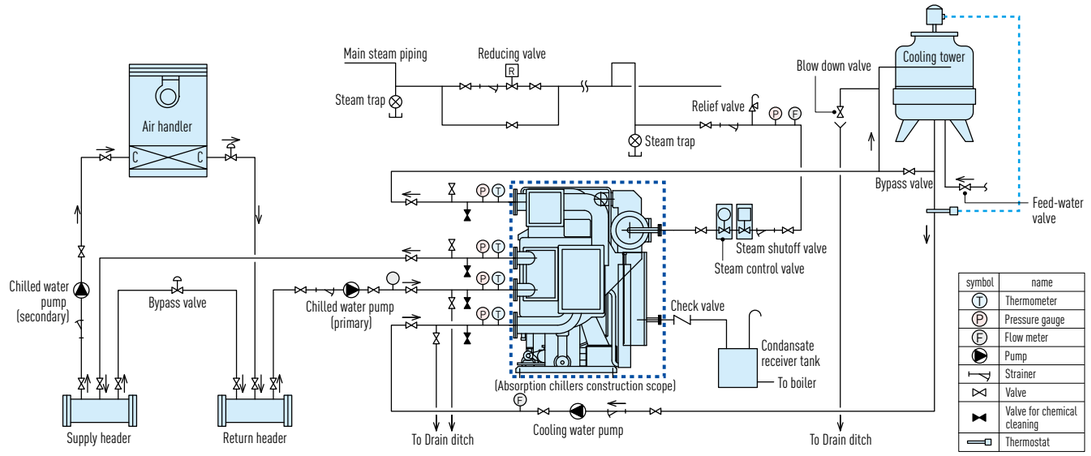


## ⚠ General remarks on piping

1. Out of dash line shall be purchaser's supply
2. Refer to the over all dimensions and specifications sheet for confirming nozzle location/size.
3. Cooling water flow rate should be constant in the range of 100-120% of the rated value. Chilled water flow rate shall not be less than 50% of the rated value. Otherwise chiller will run down by safety cutout of "Chilled water flow". To keep stable temperature of the leaving chilled water, fluctuation of the chilled water flow rate should be less or equal 20% per 10 minutes.
   In case of the secondary chilled water pump will be stopped and/or the air handler will be stopped before a dilution operation is completed, the retained water volume of the primary chilled water system should be more than 36 litter/RT. Otherwise, operate the chilled water pumps and air handling uint for 6 minutes during delution operation.
4. Location of chilled water pump, cooling water pump, expansion tank should be designed with static pressure and pump head in mind. Max. working pressure of chilled water and cooling water are indicated on the specification sheet.
5. Cooling water temperature should be controlled in accordance with "Cooling water temperature control".
6. Independent chilled water pump and cooling water pump should be provided to each chiller.
7. Quality management of cooling water is necessary. Poor water quality will cause a corrosion and/or scaling problem.
8. Install a 10 mesh strainer in each water pipe.
9. Provide a thermometer and a pressure gauge at the chilled and cooling water inlet and outlet.
10. Provide an air vent valve in each of the chilled and cooling water line at a point higher than the header.
11. Install drain valves at the lowest positions between absorption chiller and the stop valves of the chilled water and cooling water, and plumb them to the drain ditch.
12. Install stop valves between the absorption chiller and stop valves of all inlets and outlets for chemical cleaning of the water circuit system.
13. Please refer to this diagram to install 980 kPa of relief valve to ensure that the maximum pressure is not exceed Please install the relise port of the safety valve outdoors.
14. The standard vapor pressure is 784 kPa. If it exceeds 784 kPa, install a pressure reducing valve. Please install the release port of the safety valve outdoors.
15. Install a filter (100 mesh), drain water pipe and pressure gauge near the chiller steam inlet location. Without a strainer, it may cause control valve failure, steam leakage, or clogging of the heat exchanger.
16. The back pressure of the steam drain outlet pipe should be controlled below 49 kPa.
17. If there is a risk of steam and drain flowing back into the chiller during the chiller stop, install a check valve by the purchaser.
18. A steam trap has been installed in the chiller and does not need to be installed by the purchaser.
19. Stack/exhaust outlet should be located away from cooling tower.
20. The maximum steam drain temperature is 90°C.
21. If the steam superheat exceed 10 K, chiller performance would deteriorate.
22. When discharging the water in the chiller to prevent water freezing in winter, it has to be discharged from the valve which located at the bottom of the chiller pipe/header.

# Hot Water Fired Absorption Chiller

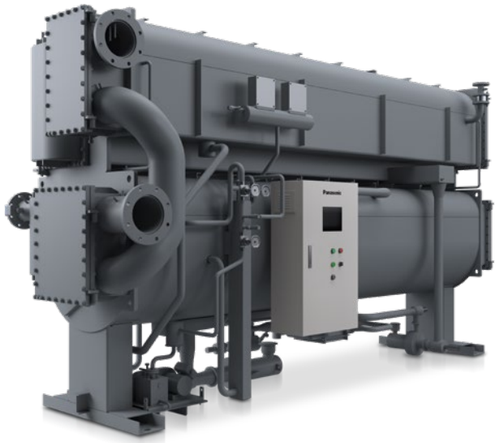

LJ series

## Ideal for Combined Heat and Power (CHP) applications

Panasonic LJ single-effect hot water fired absorption chillers produce chilled water for comfort cooling or production processes using hot water (standard hot water temperature is 90°C) as a driving energy.
Panasonic LJ absorption chillers use water as refrigerant and Lithium Bromide solution as absorbent and use no CFCs or HCFCs. Also, since an absorption cycle is accomplished without a large motor-compressor drive arrangement, the customer can be assured of quiet and low-vibration operation. Panasonic LJ absorption chillers use hot water as a heat source, which is wasted in many factories and production processes and use very little electricity, so it can be an excellent solution for saving electricity bills and increase total efficiency of energy usage at the facility.
Panasonic LJ absorption chillers are widely used with cogeneration systems and also used with various kinds of waste heat from factories.

## FEATURES : HOT WATER FIRED MODEL

### Enhanced durability by Stainless steel generator tubes

Panasonic LJ single-effect hot water fired absorption chillers (except Cabin type model) uses stainless steel tubes (SUS436L) for the generator in order to achieve enhanced durability.

### Falling film type generator

Falling film type generator is applied for Panasonic LJ single-effect hot water fired absorption chiller and it reduces amount of Lithium bromide solution and it resulted in quick start-up and quick response for load changes.

### Touch screen

Panasonic LJ single-effect hot water fired absorption chiller is equipped with Touch screen for easy operation. (except Cabin type model)

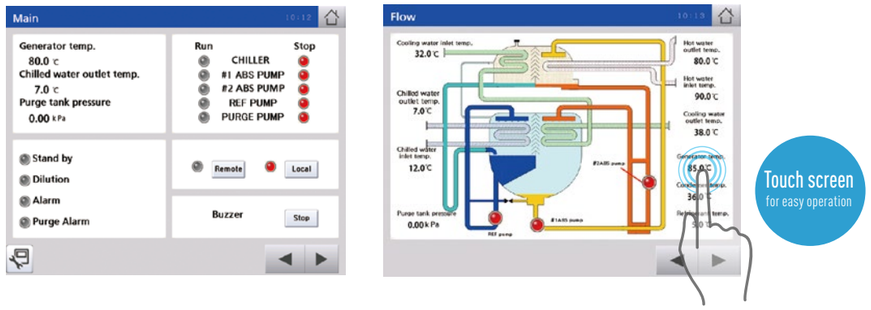


### Cycle flow diagram

■ Hot Water Fired Absorption Chiller

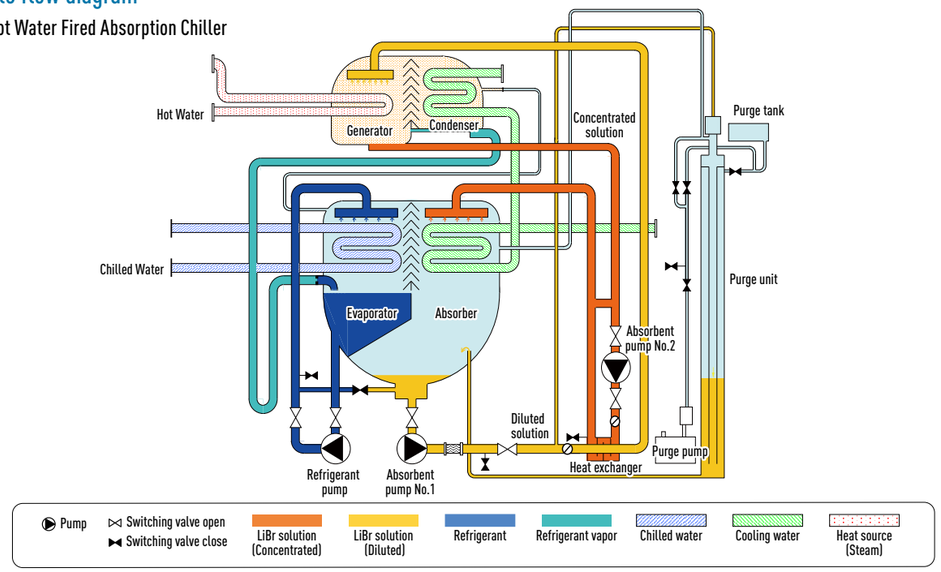

## SPECIFICATION

# HOT WATER FIRED ABSORPTION CHILLER LJ SERIES

| | | | | QA-***LJ | | | | QB-***LJ | |
|---|---|---|---|---|---|---|---|---|---|
| | | | Model Name | 75 | 90 | 110 | 135 | 155 | 180 |
| Cooling capacity | | | kW | 264 | 316 | 387 | 475 | 545 | 633 |
| | | | USRT | 75 | 90 | 110 | 135 | 155 | 180 |
| Chilled water | Temperature (Inlet→Outlet) | | °C | 12→7°C | | | | | |
| | Flow rate | | m³/h | 45.4 | 54.4 | 66.5 | 81.6 | 93.7 | 109 |
| | Pressure drop | | kPa | 72 | 78 | 48 | 53 | 47 | 50 |
| | Connection | | A | 80 | | 100 | | 125 | |
| Cooling water | Temperature (Inlet→Outlet) | | °C | 30→36.8°C | | | | | |
| | Flow rate | | m³/h | 76 | 91 | 112 | 137 | 157 | 183 |
| | Pressure drop | | kPa | 64 | 66 | 74 | 82 | 76 | 80 |
| | Connection | | A | 125 | | | | 150 | |
| Hot water | Temperature (Inlet→Outlet) | | °C | 90→80°C | | | | | |
| | Flow rate | | m³/h | 30.1 | 36.1 | 44.2 | 54.2 | 62.2 | 72.2 |
| | Pressure drop | | kPa | 54 | 54 | 74 | 78 | 74 | 76 |
| | Connection | | A | 80 | | 100 | | | |
| Power supply | Electric power supply | | | 3 phase 380 V 50 Hz | | | | | |
| | Total electric current | | A | 8.2 | | 9.1 | | 9.6 | |
| | Power capacirty (50/60Hz) | | kVA | 5.2 | | 5.7 | | 6.1 | |
| Dimension | Length | (L) | mm | 2,600 | 2,600 | 3,650 | 3,650 | 3,690 | 3,690 |
| | Width | (W) | mm | 1,400 | 1,400 | 1,400 | 1,400 | 1,500 | 1,500 |
| | Height | (H) | mm | 2,430 | 2,430 | 2,430 | 2,430 | 2,600 | 2,600 |
| | Tube extracting space | | mm | 2,400 | 2,400 | 3,400 | 3,400 | 3,400 | 3,400 |
| Weight | Operating weight | | ton | 4.1 | 4.3 | 5.2 | 5.6 | 6.9 | 7.3 |
| | Total shipping weight | | ton | 3.4 | 3.5 | 4.4 | 4.6 | 5.7 | 5.9 |
| Shipping method | | | | 1 | 1 | 1 | 1 | 1 | 1 |
| Holding water amount | Chilled water | | L | 114 | 129 | 150 | 172 | 224 | 245 |
| | Cooling water | | L | 378 | 418 | 478 | 538 | 679 | 742 |
| | Hot water | | L | 198 | 221 | 255 | 290 | 376 | 410 |

| QB-***LJ | | QC-***LJ | | QD-***LJ | | QE-***LJ | | |
|---|---|---|---|---|---|---|---|---|
| 210 | 240 | 270 | 300 | 335 | 375 | 420 | 470 | 525 |
| 738 | 844 | 949 | 1,055 | 1,178 | 1,319 | 1,477 | 1,653 | 1,846 |
| 210 | 240 | 270 | 300 | 335 | 375 | 420 | 470 | 525 |
| 12→7°C | | | | | | | | |
| 127 | 145 | 163 | 181 | 203 | 227 | 254 | 284 | 318 |
| 101 | 105 | 50 | 52 | 45 | 42 | 97 | 47 | 62 |
| 125 | | 150 | | 200 | | | | |
| 30→36.8°C | | | | | | | | |
| 213 | 244 | 274 | 304 | 340 | 381 | 426 | 477 | 533 |
| 85 | 86 | 91 | 93 | 94 | 96 | 105 | 86 | 113 |
| 200 | | | | 250 | | | 300 | |
| 90→80°C | | | | | | | | |
| 84.2 | 96.3 | 109 | 121 | 135 | 151 | 169 | 189 | 211 |
| 71 | 71 | 96 | 97 | 97 | 98 | 88 | 37 | 49 |
| 125 | | | | 150 | | | 200 | |
| 3 phase 380 V 50 Hz | | | | | | | | |
| 10.1 | | | | 11.4 | | 13.7 | 14.1 | 17.0 |
| 6.4 | | | | 7.3 | | 8.8 | 9.0 | 10.9 |
| 4,770 | 4,770 | 5,300 | 5,300 | 5,330 | 5,330 | 5,530 | 5,950 | 6,480 |
| 1,500 | 1,500 | 1,580 | 1,580 | 1,690 | 1,690 | 2,045 | 2,045 | 2,045 |
| 2,600 | 2,600 | 2,840 | 2,840 | 3,080 | 3,080 | 3,450 | 3,450 | 3,450 |
| 4,500 | 4,500 | 5,000 | 5,000 | 5,000 | 5,000 | 5,100 | 5,700 | 6,200 |
| 8.4 | 8.8 | 11.0 | 11.5 | 13.7 | 14.3 | 20.2 | 21.5 | 22.8 |
| 6.8 | 7.1 | 9.0 | 9.3 | 11.1 | 11.5 | 16.0 | 17.1 | 18.1 |
| 1 | 1 | 1 | 1 | 1 | 1 | 1 | 1 | 1 |
| 276 | 304 | 350 | 379 | 479 | 542 | 749 | 809 | 873 |
| 819 | 903 | 1,120 | 1,200 | 1,391 | 1,504 | 2,374 | 2,531 | 2,696 |
| 456 | 502 | 567 | 612 | 744 | 804 | 1,016 | 1,089 | 1,165 |

Note
(1) 1 USRT=3.52 kW (3024 kcal/h)
(2) Standard chilled water inlet and outlet temperature is 12°C→7°C. (Standard temperature differential is 5°C)
(3) Standard cooling water inlet and outlet temperature is 30°C→36.8°C.
(4) Pressure drop unit conversion (1 kPa=0.102 mAq)
(5) Standard Hot water inlet and outlet temperature is 90°C→80°C.
(6) Max. working pressure of chilled water and cooling water is 1034 kPaG (10.54 kg/cm²G)
(7) Fouling factor of chilled water and cooling water are in accordance with JIS B8622-2016.
(8) Chiller performance tolerance is in accordance with JIS B8622-2016.
(9) Above figures are subject to change without notice.

## SCOPE OF ORDER

# HOT WATER FIRED LJ SERIES

| Item | | Standard | Option |
|---|---|---|---|
| Standard | | JIS B 8622 | No option |
| Chilled water | Temperature | Inlet : 12°C<br>Outlet : 7°C | Outlet : 5°C thru 12°C<br>Temperature difference 3°C thru 10°C |
| | Flow rate | 0.605 $m^3$/h·RT | Changes depending on chilled water temperature difference (min. 50%) |
| | Max. working pressure | 1.0 MPaG | Max 2.0 MPaG |
| | Hydrostatic test pressure | Max. working press. x 1.5 | No option |
| | Fouling factor | JIS (0.086 $m^2$K/kW) | Contact Panasonic |
| | Connecting flange | JIS | ANSI, DIN |
| | Material of tube | Copper tube | Contact Panasonic |
| | Water quality | Refer to JRA-GL02E-1994 | No option |
| | Structure of water header | Removal type | Marine type |
| | Manufacturing standard of water header | Panasonic Standard | No option |
| Cooling water | Temperature | Inlet : 30.0°C<br>Outlet : 36.8°C | Inlet : 20°C thru 40°C<br>(There is a limit by the other conditions) |
| | Flow rate | 1.016 $m^3$/h·RT | Within the water flow rate range of each model |
| | Max. working pressure | 1.0 MPaG | Max 2.0 MPaG |
| | Hydrostatic test pressure | Max. working press. x 1.5 | No option |
| | Fouling factor | JIS (0.086 $m^2$K/kW) | Contact Panasonic |
| | Connecting flange | JIS | ANSI, DIN |
| | Material of tube | Absorber : Copper Condenser : Stainless | Contact Panasonic |
| | Water quality | Refer to JRA-GL02E-1994 | No option |
| | Structure of water header | Marine type | No option |
| | Manufacturing standard of water header | Panasonic Standard | No option |
| Hot water | Temperature | Inlet : 90°C<br>Outlet : 80°C | Inlet Max 110°C |
| | Flow rate | 0.401 $m^3$/h·RT | Within the water flow rate range of each model |
| | Max. working pressure | 1.0 MPaG | Max 2.0 MPaG |
| | Hydrostatic test pressure | Max. working press. x 1.5 | No option |
| | Fouling factor | JIS (0.086 $m^2$K/kW) | Contact Panasonic |
| | Connecting flange | JIS | ANSI, DIN |
| | Material of tube | Stainless | Contact Panasonic |
| | Hot water quality | Refer to JRA-GL02E-1994 | No option |
| | Structure of water header | LJF11/63 : Removal type | Marine type |
| | | LJF71/82 : Marine type | No option |
| | Manufacturing standard of water header | Panasonic Standard | No option |
| Electricity | Phase<br>Voltage<br>Frequency | 3 ø 380 V 50 Hz<br>(Voltage regulation : within ±10%)<br>(Frequency regulation : within ±5%) | 3 ø 200-460 V 50-60 Hz<br>(Voltage regulation : within ±10%)<br>(Frequency regulation : within ±5%) |
| Thermal insulation | | Insulation by purchaser | Cold surface |
| Shipment | | 1 section shipment (LiBr charged) | Contact Panasonic |
| Control | Safety functions | Chilled water freezing protection | Cooling water flow switch |
| | | Chilled water flow switvh | |
| | | Cooling water temperature | |
| | | Generator temperature | |
| | | Generator pressure | |
| | | Crystallization protection | |
| | | Motor protection | |
| | Capacity control | Digital PID control by CHW temp | No option |
| | | Remote control of CHW by 4-20mA | No option |
| | Parts | Selected by Panasonic | No option |
| Control panel | Painting | Munsell No. 5Y-7/1 | No option |
| | Indication lamps | Operation : Green<br>Stop : Orange<br>Alarm : Red | No option |
| | Display | 8.4 inch color display (Touch panel) | No option |
| | External terminals<br>(No-voltage normal open contact) | Operation indication | Contact Panasonic |
| | | Stop indication | |
| | | Alarm indication | |
| | | Answer back indication | |
| | | Cooling mode indication | |
| | | Purge alarm indication | |
| | BMS | Modbus | BACnet |
| | Installation condition | Indoor type | Outdoor type (Contact panasonic) |
| | Parts | Selected by Panasonic | No option |
| Electrical wiring and piping | | Wire : 600V grade polyvinyl chloride-insulated wires | No option |
| | | Pipe : plica tube (Flexible metal conduits) | No option |
| Installation condition | Installation condition | Indoor type | Outdoor type (Contact panasonic) |
| | Ambient temperature | 5°C thru 40°C | No option |
| | Ambient humidity | Relative humidity : Max 90% at 45°C | No option |
| | Atmosphere | Be sure the following are not present<br>*Corrosive gas<br>*Explosive gas<br>*Poisonous gas | Contact panasonic |
| Factory test | | Leak test of vacuum side<br>Electric insulation resistance test<br>Dielectric breakdown test<br>Function test of electric circuit | Performance test |



# Hot Water Fired Absorption Chiller (Cabin type)


LJ series (Cabin type)

## Ideal for Combined Heat and Power (CHP) applications

Panasonic LJ (cabin type) single effect hot water fired absorption chiller uses waste hot water as a heat source and produce chilled water effectively.
Panasonic LJ (cabin type) single effect hot water fired absorption chillers are available in three models with different cooling capacities.
The unit is factory insulated and easy to install.
Panasonic LJ (cabin type) single effect hot water fired absorption chiller is ideal for combination with a small CHP system.

## SPECIFICATION

# HOT WATER FIRED ABSORPTION CHILLER LJ SERIES (Cabin type)

| | | | QP-***LJ | | |
|---|---|---|---|---|---|
| Model Name | | | 25 | 40 | 50 |
| Cooling capacity | | kW | 88 | 140 | 176 |
| | | USRT | 25 | 40 | 50 |
| Chilled water | Temperature (Inlet→Outlet) | °C | 12→ 7°C | | |
| | Flow rate | $m^3/h$ | 15.1 | 24.2 | 30.2 |
| | Pressure drop | kPa | 99 | 83 | 81 |
| | Connection diameter (JIS) | A | 50 | 65 | |
| Cooling water | Temperature (Inlet→Outlet) | °C | 30→35.7°C | | |
| | Flow rate | $m^3/h$ | 31.9 | 51.0 | 63.8 |
| | Pressure drop | kPa | 59 | 43 | 38 |
| | Connection diameter (JIS) | A | 80 | 100 | |
| Hot water | Temperature (Inlet→Outlet) | °C | 90→80°C | | |
| | Flow rate | $m^3/h$ | 11.0 | 17.6 | 22.0 |
| | Pressure drop | kPa | 52 | 31 | 36 |
| | Connection diameter (JIS) | A | 50 | 65 | |
| Power supply | Electric power supply | | 3 phase 380 V 50 Hz | | |
| | Total electric current | A | 5.6 | | |
| | Power capacirty (50/60Hz) | kVA | 3.4 | | |
| Dimension | Length (L) | mm | 1,745 | 2,450 | |
| | Width (W) | mm | 1,255 | | 1,435 |
| | Height (H) | mm | 2,115 | | |
| | Tube extracting space | mm | 900 | 1,350 | |
| Weight | Operating weight | ton | 2.07 | 2.68 | 3.15 |
| | Total shipping weight | ton | 1.82 | 2.38 | 2.72 |
| Shipping method | | | 1 | | |
| Holding water amount | Chilled water | L | 70 | 90 | 120 |
| | Cooling water | L | 134 | 183 | 242 |
| | Hot water | L | 44 | 54 | 69 |

Note
(1) 1 USRT=3.52 kW (3024 kcal/h)
(2) Standard chilled water inlet and outlet temperature is 12°C→7°C. (Standard temperature differential is 5°C)
(3) Standard cooling water inlet and outlet temperature is 30°C→35.7°C.
(4) Pressure drop unit conversion (1 kPa=0.102 mAq)
(5) Standard Hot water inlet and outlet temperature is 90°C→80°C.
(6) Max. working pressure of chilled water and cooling water is 784 kPa (8 kg/$cm^2$G)
(7) Fouling factor of chilled water and cooling water are in accordance with JIS B8622-2016.
(8) Chiller performance tolerance is in accordance with JIS B8622-2016.
(9) Above figures are subject to change without notice.



## SCOPE OF ORDER

# HOT WATER FIRED LJ SERIES (Cabin type)

| Item | | Standard | Option |
|---|---|---|---|
| Standard | | JIS B 8622 | No option |
| Chilled water | Temperature | Inlet : 12°C<br>Outlet : 7°C | Outlet : 5°C thru 12°C<br>Temperature difference 3°C thru 10°C |
| | Flow rate | 0.605 $m^3$/h·RT | Changes depending on chilled water temperature difference (min. 50%) |
| | Max. working pressure | 0.784 MPa | No option |
| | Hydrostatic test pressure | Max. working press. x 1.5 | No option |
| | Fouling factor | JIS (0.086 $m^2$K/kW) | Contact Panasonic |
| | Connecting flange | JIS | ANSI, DIN |
| | Material of tube | Copper tube | Contact Panasonic |
| | Water quality | Refer to JRA-GL02E-1994 | No option |
| | Structure of water header | Welded type | No option |
| | Manufacturing standard of water header | Panasonic Standard | No option |
| Cooling water | Temperature | Inlet : 30°C<br>Outlet : 35.7°C | Inlet : 20°C thru 40°C<br>(There is a limit by the other conditions) |
| | Flow rate | 1.275 $m^3$/h·RT | Within the water flow rate range of each model |
| | Max. working pressure | 0.784 MPa | No option |
| | Hydrostatic test pressure | Max. working press. x 1.5 | No option |
| | Fouling factor | JIS (0.086 $m^2$K/kW) | Contact Panasonic |
| | Connecting flange | JIS | ANSI, DIN |
| | Material of tube | Copper tube | Contact Panasonic |
| | Water quality | Refer to JRA-GL02E-1994 | No option |
| | Structure of water header | Marine type | No option |
| | Manufacturing standard of water header | Panasonic Standard | No option |
| Hot water | Temperature | Inlet : 90°C<br>Outlet : 80°C | Inlet Max 110°C<br>Outlet Min. 70°C |
| | Flow rate | 0.44 $m^3$/h·RT | Within the water flow rate range of each model |
| | Max. working pressure | 0.784 MPa | No option |
| | Hydrostatic test pressure | Max. working press. x 1.5 | No option |
| | Fouling factor | JIS (0.086 $m^2$K/kW) | Contact Panasonic |
| | Connecting flange | JIS | ANSI, DIN |
| | Material of tube | Copper tube | Contact Panasonic |
| | Hot water quality | Refer to JRA-GL02E-1994 | No option |
| | Structure of water header | Marine type | No option |
| | Manufacturing standard of water header | Panasonic Standard | No option |
| Electricity | Phase<br>Voltage<br>Frequency | 3 ø 380 V 50 Hz<br>(Voltage regulation : within ±10%)<br>(Frequency regulation : within ±5%) | 3 ø 200-460 V 50·60 Hz<br>(Voltage regulation : within ±10%)<br>(Frequency regulation : within ±5%) |
| Thermal insulation | | Insulation by purchaser | Cold surface |
| Shipment | | 1 section shipment (LiBr charged) | Contact Panasonic |
| Control | Safety functions | Chilled water freezing protection | Cooling water flow switch |
| | | Chilled water flow switvh | |
| | | Cooling water temperature | |
| | | Generator temperature | |
| | | Generator pressure | |
| | | Crystallization protection | |
| | | Motor protection | |
| | Capacity control | Digital PID control by CHW temp | No option |
| | | Remote control of CHW by 4-20 mA | No option |
| | Parts | Selected by Panasonic | No option |
| Control panel | Painting | Munsell No. 5Y-7/1 | No option |
| | Indication lamps | Operation : Green<br>Stop : Orange<br>Alarm : Red | No option |
| | Display | LED | No option |
| | External terminals<br>(No-voltage normal open contact) | Operation indication | Contact Panasonic |
| | | Stop indication | |
| | | Alarm indication | |
| | | Answer back indication | |
| | | Cooling mode indication | |
| | | Purge alarm indication | |
| | BMS | - | No option |
| | Installation condition | Indoor type | Outdoor type (Contact panasonic) |
| | Parts | Selected by Panasonic | No option |
| Exterior panel painting | | Munsell No. 1Y-8.5/0.5 | No option |
| Electrical wiring and piping | | Wire : 600V grade polyvinyl chloride-insulated wires | No option |
| | | Pipe : plica tube (Flexible metal conduits) | No option |
| Installation condition | Installation condition | Indoor type | Outdoor type (Contact panasonic) |
| | Ambient temperature | 5°C thru 40°C | No option |
| | Ambient humidity | Relative humidity : Max 90% at 45°C | No option |
| | Atmosphere | Be sure the following are not present<br>*Corrosive gas<br>*Explosive gas<br>*Poisonous gas | Contact panasonic |
| Factory test | | Leak test of vacuum side<br>Electric insulation resistance test<br>Dielectric breakdown test<br>Function test of electric circuit | Performance test |

## TYPICAL PIPING DIAGRAM

In order to prevent freezing up of chilled water during dilute operation of the chiller,
continue the operation of the chilled water pumps and air-conditioner until the dilute operation will be completed (shortest 6 minutes).

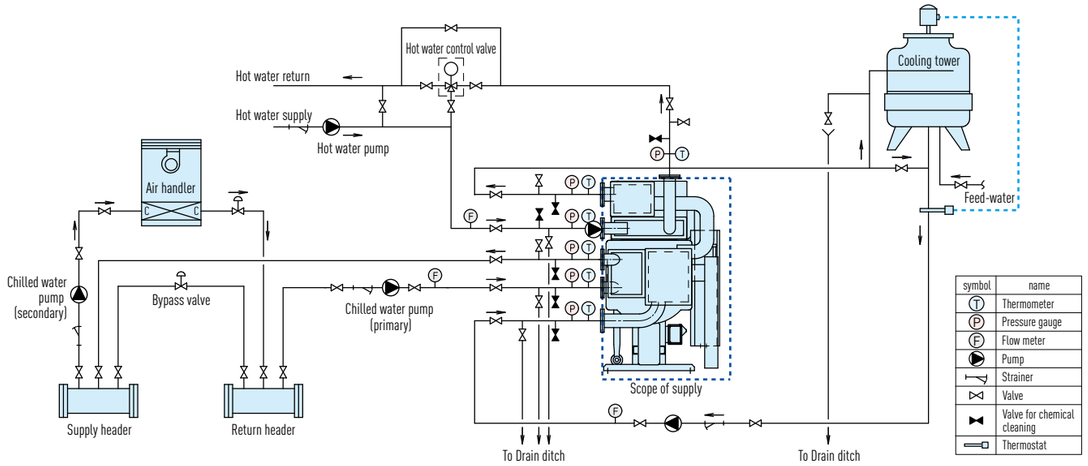


### General remarks on piping

1. Equipment and parts outside the area surrounded by the broken line are not supplied by Panasonic.
2. For pipe connections and diameter, refer to the dimensional drawings and specification tables.
3. Cooling water flow should be constant in the range of 100 - 120% of the rated value. Chilled water flow rate shall not be less than 50% of the rated value, otherwise the chiller will stop. Please secure the chilled water's retention volume at least 11 liter / kW.
4. Position the chilled water pump, cooling water pump, hot water pump and expansion tank correctly so that the chiller pressure does not exceed the set value.
5. For cooling water temperature control refer to the drawing "Cooling water temperature control method".
6. Separate chilled, cooling and hot water pumps should be provided for each chiller.
7. Provide a cooling water blow-down valve in the cooling tower inlet for water quality control.
8. Install a filter in the chilled water, cooling water and hot water pipes (10 mesh).
9. Install stop valves on the chilled, cooling and hot water inlet and outlet.
10. Provide a thermometer and a pressure gauge at the chilled, cooling and hot water inlet and outlet.
11. Provide an air vent valve in each of the chilled, cooling and hot water line at a point higher than the header.
12. Install drain valves at the lowest positions between absorption chiller and the stop valves of the chilled water, cooling water and hot water, and plumb them to the drain ditch.
13. Install stop valves between the absorption chiller and stop valves of all inlets and outlets for chemical cleaning of the water circuit system.
14. Install a cooling tower away from any exhaust gas outlet.
15. When discharging the water in the chiller to prevent water freezing in winter, discharge the water not only from the water boxes, but also from the valves located at the lowest points of each water system.



# Single Effect Steam Fired Absorption Chiller

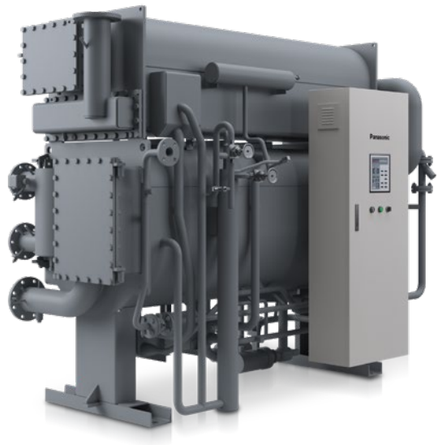

TJ series

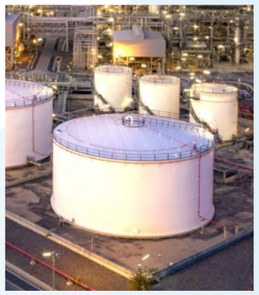

## Utilizes waste heat as a driving energy and increases total energy efficiency

Panasonic TJ single-effect low pressure steam fired absorption chillers produce chilled water for comfort cooling or production processes using low pressure steam (standard pressure is 1.0 kg/cm$^2$G) as driving energy. Panasonic TJ absorption chillers use water as refrigerant and Lithium Bromide solution as absorbent and use no CFCs or HCFCs. Also, since an absorption cycle is accomplished without a large motor-compressor drive arrangement, the customer can be assured of quiet and low-vibration operation. Panasonic TJ absorption chillers use low pressure steam as a heat source, which is wasted in many factories and production processes and use very little electricity, so it can be an excellent solution not only for saving electricity bills for air-conditioning but also for increasing total efficiency of energy usage at the facility. Panasonic TJ absorption chillers are widely used in various industries like foods and beverages, pulp and paper, Petrochemical and so on.

## SPECIFICATION

# SINGLE EFFECT STEAM FIRED ABSORPTION CHILLER TJ SERIES

| | | | | QA-***TJ | | | | QB-***TJ | |
|---|---|---|---|---|---|---|---|---|---|
| | | | Model Name | 100 | 120 | 150 | 180 | 210 | 240 |
| Cooling capacity | | | kW | 352 | 422 | 527 | 633 | 738 | 844 |
| | | | USRT | 100 | 120 | 150 | 180 | 210 | 240 |
| Chilled water | Temperature (Inlet→Outlet) | | °C | 12→7°C | | | | | |
| | Flow rate | | m³/h | 60.5 | 72.6 | 90.8 | 109 | 127 | 145 |
| | Pressure drop | | kPa | 31 | 33 | 35 | 40 | 82 | 85 |
| | Connection diameter (JIS) | | A | 100 | | | | 125 | |
| Cooling water | Temperature (Inlet→Outlet) | | °C | 32→39.1°C | | | | | |
| | Flow rate | | m³/h | 103 | 124 | 155 | 186 | 217 | 248 |
| | Pressure drop | | kPa | 53 | 57 | 49 | 57 | 50 | 55 |
| | Connection diameter (JIS) | | A | 125 | | | | 150 | |
| Steam | Steam supply pressure | | kPaG | Saturated steam 100 kPa (Max working pressure 150 kPa) | | | | | |
| | Steam consumption | | kg/h | 780 | 940 | 1,170 | 1,410 | 1,640 | 1,880 |
| | Connection diameter (JIS) | Steam inlet | A | 125 | | | | 150 | |
| | | Drain outlet | A | 40 | | | | | |
| Power supply | Electric power supply | | | 3 phase 380 V 50 Hz | | | | | |
| | Total electric current | | A | 7.1 | | 8.0 | | 9.3 | |
| | Power capacirty (50/60Hz) | | kVA | 4.4 | | 5.0 | | 5.9 | |
| Dimension | Length (L) | | mm | 2,690 | 2,690 | 3,690 | 3,690 | 3,790 | 3,790 |
| | Width (W) | | mm | 1,400 | 1,400 | 1,400 | 1,400 | 1,560 | 1,560 |
| | Height (H) | | mm | 2,200 | 2,200 | 2,200 | 2,200 | 2,350 | 2,350 |
| | Tube extracting space | | mm | 2,400 | 2,400 | 3,400 | 3,400 | 3,400 | 3,400 |
| Weight | Operating weight | | ton | 4.0 | 4.3 | 5.1 | 5.4 | 6.7 | 6.9 |
| | Total shipping weight | | ton | 3.5 | 3.7 | 4.5 | 4.7 | 5.8 | 6.0 |
| Shipping method | | | | 1 | 1 | 1 | 1 | 1 | 1 |
| Holding water amount | | Chilled water | L | 120 | 130 | 150 | 170 | 220 | 250 |
| | | Cooling water | L | 330 | 370 | 410 | 450 | 580 | 630 |

| QB-***TJ | | QC-***TJ | | QD-***TJ | | QE-***TJ | | |
|---|---|---|---|---|---|---|---|---|
| 280 | 320 | 360 | 400 | 450 | 500 | 560 | 630 | 700 |
| 985 | 1,125 | 1,266 | 1,407 | 1,582 | 1,758 | 1,969 | 2,215 | 2,461 |
| 280 | 320 | 360 | 400 | 450 | 500 | 560 | 630 | 700 |
| 12→7°C | | | | | | | | |
| 169 | 194 | 218 | 242 | 272 | 303 | 339 | 381 | 424 |
| 58 | 61 | 65 | 68 | 56 | 54 | 48 | 64 | 84 |
| 150 | | | | 200 | | | | |
| 32→39.1°C | | | | | | | | |
| 290 | 331 | 372 | 414 | 465 | 517 | 582 | 655 | 727 |
| 101 | 109 | 85 | 88 | 77 | 96 | 53 | 71 | 93 |
| 200 | | | | 250 | | 300 | | |
| Saturated steam 100 kPa (Max working pressure 150 kPa) | | | | | | | | |
| 2,190 | 2,500 | 2,810 | 3,120 | 3,510 | 3,900 | 4,370 | 4,920 | 5,460 |
| 200 | | | | | | 250 | | |
| 40 | | 50 | | 65 | | | | |
| 3 phase 380 V 50 Hz | | | | | | | | |
| 9.8 | | | | | | | 10.2 | |
| 6.2 | | | | | | | 6.5 | |
| 4,850 | 4,850 | 4,940 | 4,940 | 4,990 | 4,990 | 5,060 | 5,600 | 6,100 |
| 1,560 | 1,560 | 1,630 | 1,630 | 1,700 | 1,700 | 1,990 | 1,990 | 1,990 |
| 2,370 | 2,370 | 2,610 | 2,610 | 2,860 | 2,860 | 3,210 | 3,210 | 3,210 |
| 4,500 | 4,500 | 4,500 | 4,500 | 4,500 | 4,500 | 4,600 | 5,200 | 5,700 |
| 7.9 | 8.3 | 10.3 | 10.6 | 12.5 | 12.8 | 17.5 | 18.9 | 20.2 |
| 6.9 | 7.2 | 8.9 | 9.1 | 10.7 | 10.9 | 14.8 | 16.0 | 17.1 |
| 1 | 1 | 1 | 1 | 1 | 1 | 1 | 1 | 1 |
| 290 | 310 | 350 | 380 | 490 | 560 | 700 | 770 | 830 |
| 690 | 760 | 980 | 1,050 | 1,310 | 1,410 | 1,980 | 2,130 | 2,280 |

Note
(1) 1 USRT=3.52 kW (3024 kcal/h)
(2) Standard chilled water inlet and outlet temperature is 12°C→7°C. (Standard temperature differential is 5°C)
(3) Standard cooling water inlet and outlet temperature is 32°C→39.1°C.
(4) Pressure drop unit conversion (1 kPa=0.102 mAq)
(5) Max. working pressure of chilled water and cooling water is 1034 kPaG (10.54 kg/cm²G)
(6) Standard steam supply pressure is 100 kPa (1.02kg/cm²G)
(7) Max. working pressure of steam supply is 150 kPaG (1.53 kg/cm²G)
(8) Fouling factor of chilled water and cooling water are in accordance with JIS B8622-2016.
(9) Chiller performance tolerance is in accordance with JIS B8622-2016.
(10) Above figures are subject to change without notice.

## SCOPE OF ORDER

# SINGLE EFFECT STEAM FIRED MODEL

| Item | | Standard | Option |
|---|---|---|---|
| Standard | | JIS B 8622 | No option |
| Chilled water | Temperature | Inlet : 12°C<br>Outlet : 7°C | Outlet : 5°C thru 12°C<br>Temperature difference 3°C thru 10°C |
| | Flow rate | 0.605 $m^3$/h·RT | Changes depending on chilled water temperature difference (min. 50%) |
| | Max. working pressure | 1.0 MPaG | Max 2.0 MPaG |
| | Hydrostatic test pressure | Max. working press. x 1.5 | No option |
| | Fouling factor | JIS (0.086 $m^2$K/kW) | Contact Panasonic |
| | Connecting flange | JIS | ANSI, DIN |
| | Material of tube | Copper tube | Contact Panasonic |
| | Water quality | Refer to JRA-GL02E-1994 | No option |
| | Structure of water header | Removal type | Marine type |
| | Manufacturing standard of water header | Panasonic Standard | No option |
| Cooling water | Temperature | Inlet : 32°C<br>Outlet : 39.1°C | Inlet : 20°C thru 40 °C<br>(There is a limit by the other conditions) |
| | Flow rate | 1.03 $m^3$/h·RT | Within the water flow rate range of each model |
| | Max. working pressure | 1.0 MPaG | Max 2.0 MPaG |
| | Hydrostatic test pressure | Max. working press. x 1.5 | No option |
| | Fouling factor | JIS (0.086 $m^2$K/kW) | Contact Panasonic |
| | Connecting flange | JIS | ANSI, DIN |
| | Material of tube | Copper tube | Contact Panasonic |
| | Water quality | Refer to JRA-GL02E-1994 | No option |
| | Structure of water header | Marine type | No option |
| | Manufacturing standard of water header | Panasonic Standard | No option |
| Steam | Supply pressure at chiller header | 100 kPaG | 50 kPaG thru 150 kPaG |
| | Super heat | 0 thru + 10 °C | Max +55 K |
| | Steam consumption | 7.8 kg/h·RT | Changes depend on the specification |
| | Max. working pressure | 150 kPaG | No option |
| | Hydrostatic test pressure | Max. working press. x 1.5 | No option |
| | Material of tube | 9/1 Copper nickel tube | Contact Panasonic |
| | Steam quality | Refer to JIS B 8223 | No option |
| | Manufacturing standard of water header | Panasonic Standard | No option |
| Electricity | Phase<br>Voltage<br>Frequency | 3ø 380V 50Hz<br>(Voltage regulation : within ±10%)<br>(Frequency regulation : within ±5%) | 3ø 200-460V 50·60Hz<br>(Voltage regulation : within ±10%)<br>(Frequency regulation : within ±5%) |
| Thermal insulation | | Insulation by purchaser | Cold surface |
| Shipment | | 1 section shipment (LiBr charged) | Contact Panasonic |
| Control | Safety functions | Chilled water freezing protection | Cooling water flow switch |
| | | Chilled water flow switch | |
| | | Cooling water temperature | |
| | | Generator temperature | |
| | | Generator pressure | |
| | | Crystallization protection | |
| | | Motor protection | |
| | Capacity control | Digital PID control by CHW temp | No option |
| | | Remote control of CHW by 4-20mA | No option |
| | Parts | Selected by Panasonic | No option |
| Control panel | Painting | Munsell No. 5Y-7/1 | No option |
| | Indication lamps | Operation : Green<br>Stop : Orange<br>Alarm : Red | No option |
| | Display | LED | No option |
| | External terminals<br>(No-voltage normal open contact) | Operation indication | Contact Panasonic |
| | | Stop indication | |
| | | Alarm indication | |
| | | Answer back indication | |
| | | Cooling mode indication | |
| | | Purge alarm indication | |
| | BMS | - | LonWorks |
| | Installation condition | Indoor type | Outdoor type (Contact panasonic) |
| | Parts | Selected by Panasonic | No option |
| Electrical wiring and piping | | Wire : 600V grade polyvinyl chloride-insulated wires | No option |
| | | Pipe : plica tube (Flexible metal conduits) | No option |
| Installation condition | Installation condition | Indoor type | Outdoor type (Contact panasonic) |
| | Ambient temperature | 5°C thru 40°C | No option |
| | Ambient humidity | Relative humidity : Max 90% at 45°C | No option |
| | Atmosphere | Be sure the following are not present<br>*Corrosive gas<br>*Explosive gas<br>*Poisonous gas | Contact panasonic |
| Factory test | | Leak test of vacuum side<br>Electric insulation resistance test<br>Dielectric breakdown test<br>Function test of electric circuit | Performance test |



# TYPICAL PIPING DIAGRAM

In order to prevent freezing up of chilled water during dilute operation of the chiller,
continue the operation of the chilled water pumps and air-conditioner until the dilute operation will be completed (shortest 6 minutes).

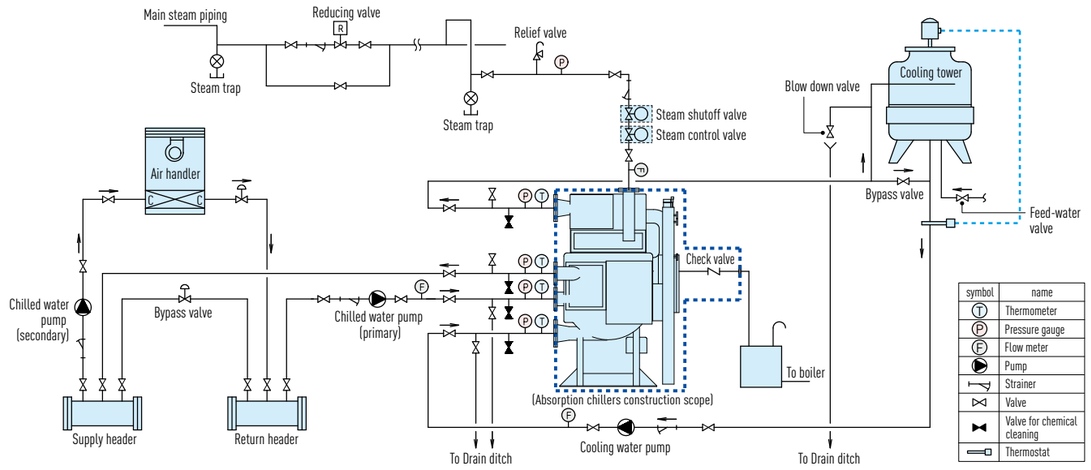


## General remarks on piping

1. Out of dash line shall be purchaser's supply.
2. Refer to the over all dimensions and specifications sheet for confirming nozzle location/size.
3. Cooling water flow rate should be constant in the range of 100-120% of the rated value. Chilled water flow rate shall not be less than 50% of the rated value. Otherwise chiller will run down by safety cutout of "Chilled water flow". To keep stable temperature of the leaving chilled water, fluctuation of the chilled water flow rate should be less or equal 20% per 10 minutes.
   In case of the secondary chilled water pump will be stopped and/or the air handler will be stopped before a dilution operation is completed, the retained water volume of the primary chilled water system should be more than 36 litter/RT. Otherwise, operate the chilled water pumps and air handling uint for 6 minutes during delution operation.
4. Location of chilled water pump, cooling water pump, expansion tank should be designed with static pressure and pump head in mind. Max. working pressure of chilled water and cooling water are indicated on the specification sheet.
5. Cooling water temperature should be controlled in accordance with "Cooling water temperature control".
6. Independent chilled water pump and cooling water pump should be provided to each chiller.
7. Quality management of cooling water is necessary. Poor water quality will cause a corrosion and/or scaling problem.
8. Install a 10 mesh strainer in each water pipe.
9. Provide a thermometer and a pressure gauge at the chilled and cooling water inlet and outlet.
10. Provide an air vent valve in each of the chilled and cooling water line at a point higher than the header.
11. Install drain valves at the lowest positions between absorption chiller and the stop valves of the chilled water and cooling water, and plumb them to the drain ditch.
12. Install stop valves between the absorption chiller and stop valves of all inlets and outlets for chemical cleaning of the water circuit system.
13. Please refer to this diagram to install 196 kPa of relief valve to ensure that the maximum pressure is not exceed Please install the relise port of the safety valve outdoors.
14. If the steam superheat exceed 5 K, chiller performance would deteriorate.
15. Install a filter (100 mesh), drain water pipe and pressure gauge near the chiller steam inlet location. Without a strainer, it may cause control valve failure, steam leakage, or clogging of the heat exchanger.
16. The back pressure of the steam drain outlet pipe should be controlled below 49 kPa.
17. If there is a risk of steam and drain flowing back into the chiller during the chiller stop, install a check valve by the purchaser.
18. A steam trap has been installed in the chiller and does not need to be installed by the purchaser.
19. Stack/exhaust outlet should be located away from cooling tower.
20. The maximum steam drain temperature is 90°C.
21. When discharging the water in the chiller to prevent water freezing in winter, it has to be discharged from the valve which located at the bottom of the chiller pipe/header.

## SCOPE OF SUPPLY

# ALL MODELS

| Item | Supplied by Panasonic | Supplied by Purchaser | Remark |
|---|---|---|---|
| **1.Transportation** | | | |
| To destination port | Depends on contract | | FOB, CIF, etc. |
| From unloading port to customer's site | Depends on contract | | |
| Unloading from the trailer or truck | | ○ | |
| Installation and leveling of chiller | | ○ | |
| **1.Equipment** | | | |
| Absorption chiller unit | ○ | | (a) Main body : Evaporator, Absorber, Condenser, Generator(s), Heat exchangers<br>(b) Absorbent pump(s), Refrigerant pump<br>(c) Purge unit<br>(d) Capacity control device<br>(e) Control box<br>(f) Safety device<br>(g) Absorbent, Refrigerant<br>(h) Internal connecting pipe and wiring |
| Painting | ○ | | [Chiller main body]<br>Panasonic scope of supply is up to anti-corrosive primary coating for chiller main unit.<br>Finish coating is not inplemented.<br>[Control panel]<br>Finish coating paint color is Munsell No. 5Y-7/1 (Semigloss) |
| Insulation for the chiller | | ○ | Cold surface (option) and Hot surface insulation shall be done as per Panasonic's instruction. |
| Steam/Hot water control valve installation | | ○ | Hot water control valve (LJ series)<br>Steam control valve and steam shut off valve (F series, TJ series)<br>Control valves (steam/hot water) and shut off valve (steam) are sent separately with the chiller main unit. Install the control valve on the piping and wire connect with chiller control panel. |
| Accessories | ○ | | (a) Purge pump oil<br>(b) Foundation bolt washers<br>(c) Matching flanges, gaskets, anchor bolts and nuts<br>(d) instructions<br>(It depends on the optional specifications.) |
| **2.Test** | | | |
| Factory test | ○ | | Hydrostatic pressure test of water headers.<br>Leak test of vacuum side.<br>Function test of electric circuit and safety devices<br>Performance test (option) |
| Chiller start up and commissioning at site | ○ | | Testing and adjustment at site including operation instructions to users. |
| **3.Installation** | | | |
| Installation of unit | | ○ | |
| Preparation for work | ○ | | Evacuation of $N_2$ gas.<br>Absorbent and refrigerant charge. (In case of dry shipment) |
| Chiller assembling | | ○ | Burner assembling work in case the burner is sent seperately.<br>Chiller assembling and welding work in case of split shipment. |
| **4.Electrical work** | | | |
| Power supply to the chiller control panel | | ○ | 3 phase 380V/AC etc. including earthing. |
| External electric allocation | | ○ | Wire to the terminal inside the control panel as per Panasonic's instruction.<br>BMS communication protocol (option) shall be discussed before ordering. |
| Cooling water temperature control device | | ○ | Install and wire the thermostat to control the bypass valve.<br>See "Cooling water management" in page 39. |
| **Other work** | | | |
| Foundation construction | | ○ | Base plates, washers, anchor bolts and nuts are provided by Panasonic.<br>Washers are recommended to be welded to the base as per Panasonic's instruction. |
| External piping work | | ○ | including piping insulation. |
| Water quality management | | ○ | Water quality shall be managed based on JRA9001 to maintain the performance of absorption chiller. |
| Electricity and water during assembling | | ○ | Assembling engineers should be able to use necessary utilities during assembling without limitation. |
| Electricity and other utilities during commissioning | | ○ | Commissioning engineers should be able to use necessary utilities during commissioning without limitation. |
| Lithium bromide solution and refrigerant | ○ | | Charged inside absorption chiller. In case of multiple piece shipment, sent separately with the chiller unit and charged by Panasonic commissioning engineer at site. |
| Disposal of packing materials | | ○ | |
| After-sales service | | ○ | Maintenance service after warranty period will be provided by Panasonic engineers according to a contract with the customer. |

Absorption chiller (/heater) includes ;
1. Absorption chiller (/heater) main body
(a) Machine of refrigeration cycle including Evaporator, Absorber, Generator (High temperature generator and Low temperature generator for F series and CP, R type), Heat exchangers etc.
(b) Purge device
(c) Capacity control device
(d) Burner (CP type, R type)
(e) Steam control valve (F series and TJ series)
(f) Steam shut off valve (F series and TJ series)
(g) Hot water control valve (LJ series)
(h) Safety devices
(i) Control panel
(j) Absorbent and refrigerant
(k) Internal piping and internal electric wiring

2. Accessories
(a) Foundation bolts, nuts and washers 1 set
(b) Instruction manual 1 set



# COOLING WATER MANAGEMENT

## Cooling water temperature control

Cooling water inlet temperature should not go down more than 13K below the design temperature (except when chiller starts operation).
In case the design temperature is 32°C, cooling water inlet temperature should not be lower than 19°C.

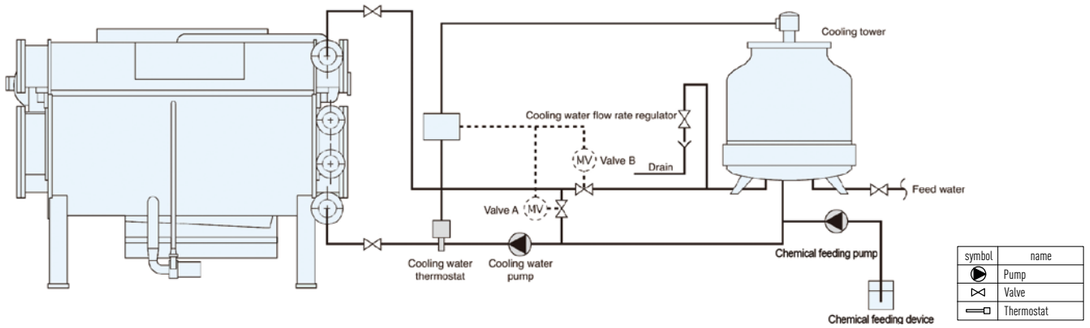


1. Monitor the cooling water temperature with a thermostat and control the cooling tower fan.
2. Install electric type Two-way valve A and B (Three-way valve can also be used), and keep the cooling water temperature at 19°C or higher.
   (For Example: Close valve B and open valve A, when cooling water supply temperature is 22°C. Close valve A and open valve B when cooling water supply temperature is 25°C.)

## Cooling water quality control

- Moisture in the cooling water is vaporized and dispersed into the atmosphere when flowing through the cooling tower. Therefore, cooling water that circulates in open type system will continuously be concentrated and deteriorated.
- If the cooling water quality becomes bad, scale and slime accumulation will arise, and the chiller unit will be troubled with capacity deterioration and heat transfer tube corrosion.
- Please install cooling water overflow device and implement water treatment appropriately, to supervise the water quality and to keep within the allowable range.
- Water quality standard for water used in air conditioners and chillers are formulated by The Japan Refrigeration and Air Conditioning Industry Association. For details please refer to following table (JRA-GL-02-1994).

## Cooling water quality standard

| Item | | Recirculating type | | Once through type | Tendency | |
|---|---|---|---|---|---|---|
| | | Recirculating water | Make-up water | Once through water | Corrosive | Scale-forming |
| Standard items | pH (25°C) | 6.5 ~ 8.2 | 6.0 ~ 8.0 | 6.8 ~ 8.0 | ○ | ○ |
| | Electrical conductivity (25°C) (mS/m) | 80 or less | 30 or less | 40 or less | ○ | ○ |
| | Electrical conductivity (25°C) (μS/cm) | 800 or less | 300 or less | 400 or less | ○ | ○ |
| | Chloride ion ($MgCl^-$/L) | 200 or less | 50 or less | 50 or less | ○ | |
| | Sulfate ion ($MgSO_4^{2-}$/L) | 200 or less | 50 or less | 50 or less | ○ | |
| | Acid consumption (pH4.8) ($MgCaCO_3$/L) | 100 or less | 50 or less | 50 or less | | ○ |
| | Total hardness ($MgCaCO_3$/L) | 200 or less | 70 or less | 70 or less | | ○ |
| | Calcium hardness ($MgCaCO_3$/L) | 150 or less | 50 or less | 50 or less | | ○ |
| | Ionic silica ($MgSiO_2$/L) | 50 or less | 30 or less | 30 or less | | ○ |
| Reference items | Iron (MgFe/L) | 1.0 or less | 0.3 or less | 1.0 or less | ○ | ○ |
| | Copper (MgCu/L) | 0.3 or less | 0.1 or less | 1.0 or less | ○ | |
| | Sulfide ion ($MgS^{2-}$/L) | Not to be detected | Not to be detected | Not to be detected | ○ | |
| | Ammonium ion ($MgNH_4^+$/L) | 1.0 or less | 0.1 or less | 1.0 or less | ○ | |