FSV CONTROLLERS

FSV Controllers

A wide variety of control options to meet the requirements of different applications.

ECONAVI Sensor

CZ-CENSC1

Utilises ECONAVI Sensor and Control Program technologies to detect where energy is normally wasted and self-adjusts cooling power to reduce energy waste.

- Activity detection
- Absence detection

OPERATION SYSTEM	INDIVIDUAL CONTROL SYSTEMS		
Requirements	Advanced operation	Normal operation	Operation from anywhere in the room
External appearance			
Type, model name	Deluxe Wired Remote Controller	Timer Remote Controller (Wired)	Wireless Remote Controller
	CZ-RTC5B	CZ-RTC4	CZ-RWSU3 CZ-RWSL2N CZ-RWSC3 CZ-RWSD2 CZ-RWST3N CZ-RWSK2
Built-in thermostat	●	●	●
ECONAVI ON/OFF control	●	●	—
Number of indoor units which can be controlled	1 group, 8 units	1 group, 8 units	1 group, 8 units
Use limitations	· Up to 2 controllers can be connected per group (When using ECONAVI sensor, only one remote controller is possible to connect at indoor unit)	· Up to 2 controllers can be connected per group (When using ECONAVI sensor, only one remote controller is possible to connect at indoor unit)	· Up to 2 controllers can be connected per group.
Function ON/OFF	●	●	●
Mode setting	●	●	●
Fan speed setting	●	●	●
Temperature setting	●	●	●
Air flow direction	●	●	●
Permit/Prohibit switching	—	—	—
Weekly program	●	●	—

All specifications are subject to change without notice.

CENTRALISED CONTROL SYSTEMS			
Operation with various functions from a central location	Only ON/OFF operation from a central location	Simplified load distribution ratio (LDR) for each tenant	Connection with 3rd Party Controller
		10.4 in. touch screen panel colour LCD	
System Controller	ON/OFF Controller	Intelligent Controller	
CZ-64ESMC3	CZ-ANC3	CZ-256ESMC3 (CZ-CFUNC2)	
—	—	—	
●	—	●	
64 groups, maximum 64 units	16 groups, maximum 64 units	64 units x 16 systems, maximum 256 units	
· Up to 10 controllers, can be connected to one system. · Main unit/sub unit (1 main unit + 1 sub unit) connection is possible. · Use without remote controller is possible.	· Up to 8 controllers (4 main units + 4 sub units) can be connected to one system. · Use without remote controller is impossible.	· A communication adaptor (CZ-CFUNC2) must be installed for three or more links.	
●	●	●	
●	—	●	
●	—	●	
●	—	●	
●	—	●	
●	●	●	
●	—	●	

Seri-Para I/O unit for outdoor unit

CZ-CAPDC2

Interface Adaptor

CZ-CAPC3

Seri-Para I/O unit for each indoor unit

CZ-CAPBC2

Communication Adaptor

CZ-CFUNC2

LonWorks Interface

CZ-CLNC2

Individual Control Systems

Control contents	Part name, model No.	Quantity
Standard Control • Control of the various operations of the indoor unit by wired or wireless remote controller. • Cooling or heating mode of the outdoor unit is decided by the first priority of the remote controller. • Switching between remote controller sensor and body sensor is possible.	Timer remote controller CZ-RTC4 / CZ-RTC5B Wireless remote controller CZ-RWSU3 / CZ-RWSL2N / CZ-RWSC3 / CZ-RWSK2 / CZ-RWST3N / CZ-RWSD2	1 unit each
(1) Group control • Batch remote control on all indoor units. • Operation of all indoor units in the same mode. • Up to 8 units can be connected. • The sensor is the body sensor, and thermostat ON/OFF setting in regard to the temperature set by the remote controller is possible for each indoor unit.	Timer remote controller CZ-RTC4 / CZ-RTC5B Wireless remote controller CZ-RWSU3 / CZ-RWSL2N / CZ-RWSC3 / CZ-RWSK2 / CZ-RWST3N / CZ-RWSD2	1 unit
(2) Main/sub remote control • Maximum 2 remote controllers per indoor unit. (Main remote controller can be connected) • The button pressed last has priority. • Timer setting is possible even with the sub remote controller. (When using ECONAVI sensor, only one remote controller is possible to connect at indoor unit)	Main or sub Timer remote controller CZ-RTC4 / CZ-RTC5B Wireless remote controller CZ-RWSU3 / CZ-RWSL2N / CZ-RWSC3 / CZ-RWSK2 / CZ-RWST3N / CZ-RWSD2	As required

SYSTEM EXAMPLE FSV-EX

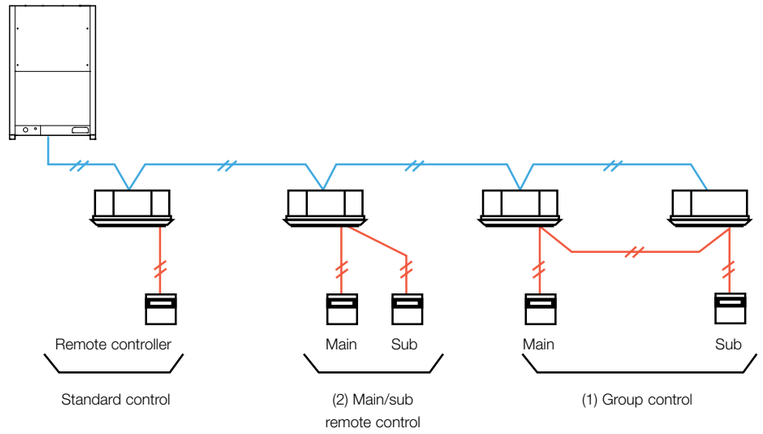

Deluxe wired remote controller (CZ-RTC5B)

Dimensions
H 120 x W 120 x
D 16mm

Energy Saving
- ECONAVI on/ off*
- Temperature Auto Return
- Temperature Setting Range
- Auto Shutoff
- Schedule peak cut
- Repeat off timer

Basic Operation
- Individual Louvre Control (Lock individual flap only for 4-WAY cassette U2 type)
- ON/ OFF timer
- Weekly Timer
- Filter information*
- Outing function
- Quiet operation mode*
- Energy saving
- Initial settings
- Ventilation

Maintenance Function
- Outdoor unit error data
- Service Contact address
- RC setting mode
- Test Run
- Sensor Information
- Service check
- Simple/ Detailed Settings
- Auto address

*Subject to the connected model.

Timer remote controller (CZ-RTC4)

Dimensions
H 120 x W 120 x
D20mm

Basic remote controller ON/OFF
- Operation mode changeover (Cooling, Heating, Dry, Auto, Fan).
- Temperature setting (Cooling/Dry: 18-30º Heating: 16-30ºg).
- Fan speed setting H/ M/ L and Auto.
- Air flow direction adjustment.
- ECONAVI on/ off*

Time Function 24 hours real time clock
- Day of the week indicator.

Weekly Programme Function
- A maximum of 6 settings/ day and 42 settings/ week can be programmed.

Outing Function
- This function can prevent the room temperature from dropping or rising when the occupants are out for a long time.

Sleeping Function
- This function controls the room temperature for comfortable sleeping.

Maximum 8 indoor units can be controlled from one remote controller

Remote control by main remote controller and sub controller is possible

Maximum 2 remote controllers (main remote controller and sub controller) can be installed for one indoor unit.

* Depending on the model, some menus cannot be used.

Wireless remote controller

L1 type
CZ-RWSL2N

U2 type
CZ-RWSU3

T2 type
CZ-RWST3N
D1 type
CZ-RWSD2

K2, Y2 type
CZ-RWSK2

For all indoor units
CZ-RWSK2 +
CZ-RWSC3

Remote control by main remote controller and sub controller is possible
- Maximum 2 remote controllers (main remote controller and sub controller) can be installed for one indoor unit.

When CZ-RWSC3 is used, wireless control becomes possible for all indoor units
- When a separate receiver is set up in a different room, control from that room also becomes possible.
- Automatic operation by means of the emergency operation button is possible even when the remote controller has been lost or the batteries have been exhausted.

In addition, there are other functions such as temperature setting, operation switching, airflow direction/fan speed setting, etc

Ventilation independent operation is possible
When commercial ventilation fans or heat-exchange ventilation fans have been installed, they can be operated with this remote control (interlocked operation with the indoor unit or independent ventilation ON/OFF).

Centralised Control Systems

System controller (CZ-64ESMC3)

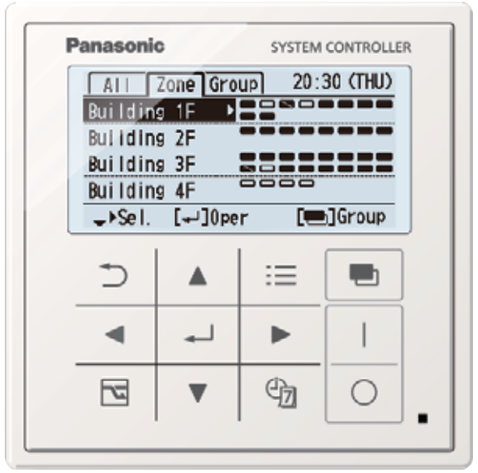

Dimensions
H 120 x W 120 x D 16 + 52
(embedding dimension mm)

Power supply: AC 100 to 240 V
I/O part:
Remote input part (effective voltage:DC24V) All operation,All stop,Demand 1,Demand 2
Remote output part (non voltage contact) Operation, Alarm (external power supply within DC 30V, max 0.5A)
Total wiring length : 1km

Individual control is possible for maximum 64 groups, 64 indoor units.

- Control of 64 indoor units divided into 4 zones. (One zone can have up to 16 groups, and one group can have up to 8 units.)
- Control is possible for ON/OFF, operation mode, fan speed, air flow direction, operation monitoring, alarm monitoring, ventilation, remote controller local operation prohibition, etc.

Prohibition setting for Remote controller operation

Setting mode	ON/OFF	Mode	Temperature	Fan speed	Flap
Permit	●	●	●	●	●
Prohibit 1	–	●	●	●	●
Prohibit 2	–	–	–	●	●
Prohibit 3	●	–	–	●	●
Prohibit 4	●	–	●	●	●

In case of joint use with a wireless remote controller, there are limitations for the control mode. Please use only with setting “Permit” and “Prohibit1 (prohibition for ON/OFF)”.

*Contents for Prohibit 1~4 can be modified.
● : Operation from the remote controller is possible.
– : Operation from the remote controller is prohibited.

- Joint use with a remote controller, an intelligent controller, etc. is possible

(The maximum number of connectable system controllers is 10, including other central controllers on the same circuit.)
(In case of joint use with a wireless remote controller, there are limitations for the control mode. Please use only with setting “Permit” and “Prohibit1 (prohibition for ON/OFF)”.)

- Control of systems without a remote controller and of main/ sub systems (a total of up to 2 units) is possible
- Weekly timer function
  - 8 programs per day (with ON/ OFF/ Mode/ Temperature/ Central control setting items) for 1week (7days) can be set.
  - Special holiday setting can ignore the timer operation temporarily by keeping the original timer setting. (Special holiday setting can be removed by same setting display.)
- 5 types of Energy saving function

Set temperature automatic return / Set temperature range limitation / Off remind / Off timer operation / Demand control timer.

- A control mode corresponding to the use condition can be selected from 10 patterns

A : Operation mode: Central control mode or remote control mode can be selected
Central control mode: The system controller is used as centralised control device. (Setting from a remote controller can be prohibited by prohibiting local operation from the system controller.)
Remote control mode: The system controller is used as a remote controller. (Setting from the system controller can be prohibited by prohibiting local operation from another central control unit.)

B : Controlled unit number mode: All mode or zone 1, 2, 3, 4 mode can be selected
All mode: All, zone, or group unit can be selected.
Zone 1, 2, 3, 4 mode: Setting is possible only for the indoor units of zone 1, 2, 3, or 4.

Connection example			
		A Operation mode	
		Central control mode	**Remote control mode**
B Controlled unit number mode	All mode	All central control Example 1	All remote control
	Zone 1 mode	Zone 1 central control Example 2	Zone 1 remote control
	Zone 2 mode	Zone 2 central control	Zone 2 remote control Example 3
	Zone 3 mode	Zone 3 central control Example 4	Zone 3 remote control
	Zone 4 mode	Zone 4 central control	Zone 4 remote control Example 5

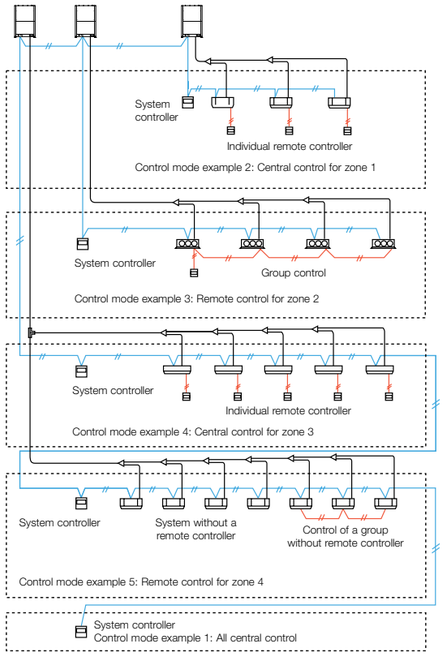

ON/OFF controller (CZ-ANC3)

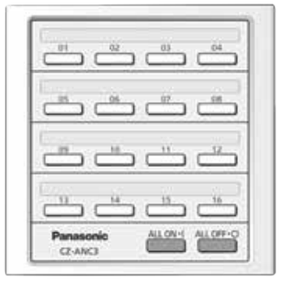

Dimensions
H 121 x W 122 x D 14 + 52
(embedding dimension mm)

Power supply: AC 100 to 240 V
I/O part:
Remote input (effective voltage: within DC 24 V): All ON/OFF
Remote output (allowable voltage: within DC 30 V): All ON, All alarm

- 16 groups of indoor units can be controlled.
- Collective control and individual group (unit) control can also be performed.
- Up to 8 ON/OFF controller (4 main, 4 sub) can be installed in one link system.
- The operation status can be determined immediately.

Intelligent controller (CZ-256ESMC3)

Touch panel

Dimensions
H 240 x W 280 x D 85mm
Power supply: AC 100 to 240 V (50/60 Hz)
LCD: 10.4 in. TFT, XGA(1024 x 768), LED backlight

Product Features

- 10.4 in., Large, easy-to-use colour LCD
  - With Smartphone-like operations, such as swiping and flicking
- Enhanced energy-saving control functions
  - Packed with demand functions
  - Set temperature auto return settings, auto shutoff, set temperature range limit settings
- Energy Visualisation
  - Displays electricity and gas usage distribution
  - Supports energy-saving plans with graph display function

New Features

- Maximum 256 indoor unit [16 systems x 64 units] can be controlled. In case of three or more systems [more than 128 units], a communication adaptor CZ-CFUNC2 must be installed for three or more links.
- Operation is possible as batch, in zone units, and in group units.
- ON/OFF, operation mode setting, temperature setting, for fan speed setting, air flow direction setting (when used without a remote controller) and remote controller local operation prohibition [prohibition 1,2,3,4] can be done
- Graph display [trends, comparisons]
- ECONAVI ON/OFF
- Outdoor unit quiet operation ON/OFF
- Energy-saving Functions
- Event control [such as equipment linkage]
- Limitation contents for prohibited operation

Prohibition means limitation of the operation contents from the remote controller. It is also possible to change the prohibition items.

Limitation contents
(Limitations can be user defined)

Individual	There is no limitation for the operation of the remote controller. However, the contents will be changed to the contents of the controller operated last. (Last-pressed priority.)
Prohibition 1	The remote controller cannot be used for ON/OFF. (All other operations are possible from the remote controller.)
Prohibition 2	The remote controller cannot be used for ON/OFF, operation mode change and temperature setting. (All other operations are possible from the remote controller.)
Prohibition 3	The remote controller cannot be used for operation mode change and temperature setting. (All other operations are possible from the remote controller.)
Prohibition 4	The remote controller cannot be used for operation mode change. (All other operations are possible from the remote controller.)

- Remote Control

The LAN terminal on this unit enables you connect it to a network. Connecting to internet will enable you to operate the unit and check the status using a PC from remote location.

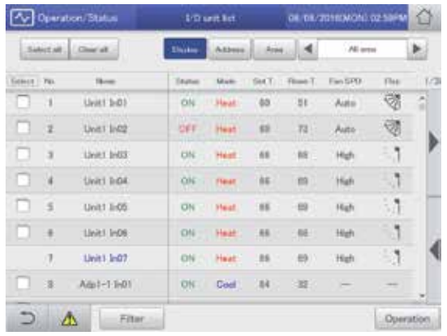

Display image on the remote PC is same design as the controller unit.

System configuration

The following is an example of a system configuration.

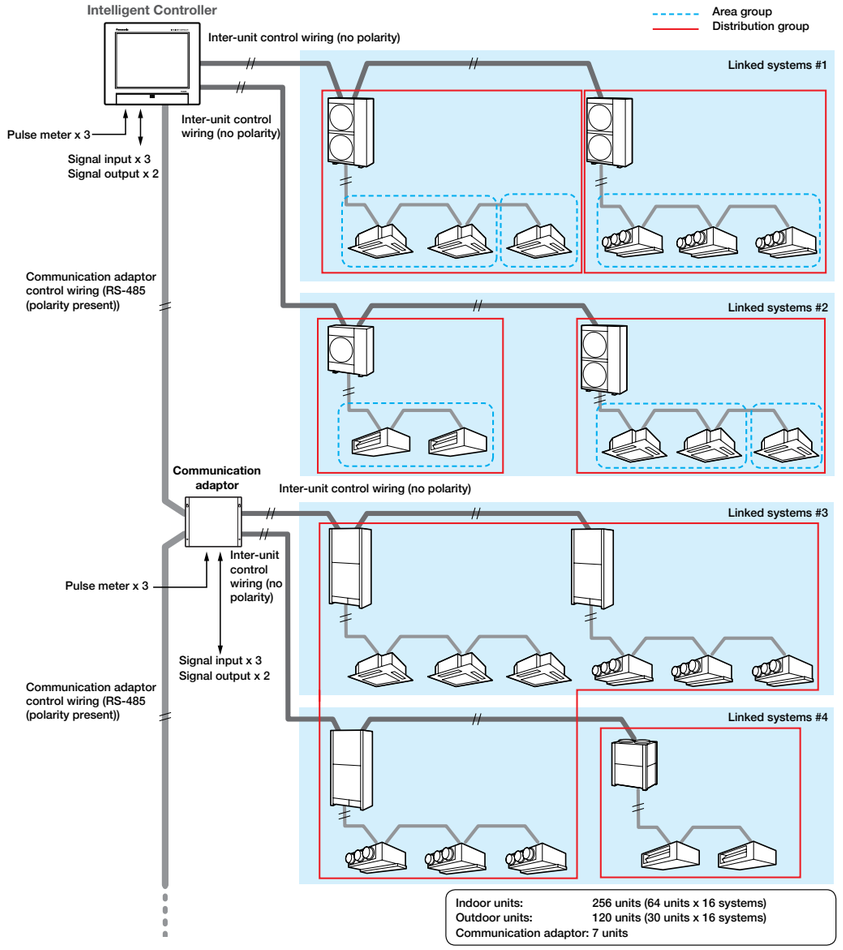

Communication adaptor (CZ-CFUNC2)

* Required when more than 129 indoor units are connected.

T10 Terminal for External Control (Digital Connection)

Connecting an FSV indoor unit to an external device is easy.
The T10 Terminal featured in the electronic circuit board of all indoor units enables digital connection to external devices.

1. T10 Terminal Specification (T10:CN061 at indoor unit PCB)

- **Control items**: 1. Start/stop input (eg hotel key card, push button operation)
  2. Remote controller prohibit input
  3. Operation status output (eg fresh air fan)
  4. Fault status output

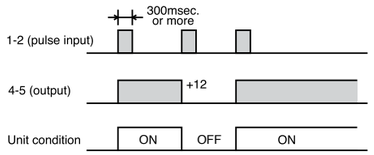

NOTE: The wire length from indoor unit to the Relay must be within 2.0m.
Pulse signal changeable to static with JP cutting. (Refer to JP001)

- **Example of wiring**

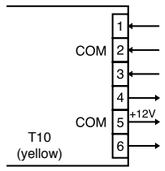

Condition

1. 1-2 (Pulse input): Unit ON/OFF condition switching with a pulse signal. (1 pulse signal: shortage status more than 300msec.or more)
2. 2-3 (Static input): Open/ Operation with Remote is permitted.(Normal condition) Close/ Remote controller is prohibited.
3. 4-5 (Static output): 12V output during the unit ON. / No output at OFF.
4. 5-6 (Static output): 12V output when some errors occur / No output at normal.

2. Usage Example

Forced OFF control

- **Condition**

1-2 (Static input): Close/ Operation with Remote is permitted. (Normal condition) Open/ Unit is forcibly OFF and Remote controller operation is prohibited.

- **Example of wiring**

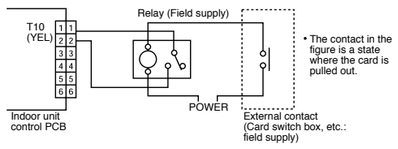

NOTE: The wire length from indoor unit to the Relay must be within 2.0m

Operation ON/OFF signal output

- **Condition**

4-5 (Static output): 12V output during the unit ON / No output at OFF

- **Example of wiring**

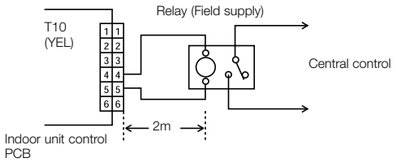

NOTE: The wire length from indoor unit to the Relay must be within 2.0m
Pulse signal changeable to static with JP cutting. (Refer to JP001)

Interfaces for External Control (Digital Connection)

Seri-Para I/O unit for each indoor unit (CZ-CAPBC2)

System example

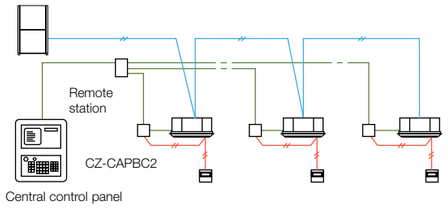

- Control and status monitoring is possible for individual indoor unit (1 group).
- In addition to operation and stop, there is a digital input function for air speed and operation mode.
- Temperature setting and measuring of the indoor suction temperature can be performed from central monitoring.
- The analogue input for temperature setting is 0 to 10 V, or 0 to 140 Ohm.
- Power is supplied from the T10 terminal of the indoor units.
- Separate power supply also is possible (in case of suction temperature measuring).

Interface adaptor (CZ-CAPC3)

- Control and status monitoring is possible for individual indoor unit (or any external electrical device up to 250 V AC, 10 A) by contact signal.

System example

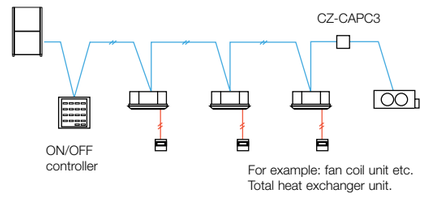

Seri-Para I/O unit for outdoor unit (CZ-CAPDC2)

Dimensions	H 80 x W 290 x D 260mm
Power supply	Single phase 110-120/220-240V (50/60 Hz), 18W
Input	Batch operation/Batch stop (non-voltage contact/DC 24V, pulse signal). Cooling/Heating (non-voltage contact/static signal). Demand 1/2 (non-voltage contact/static signal) (Local stop by switching)
Output	Operation output (non-voltage contact). Alarm output (non-voltage contact)
Wiring length	Indoor/Outdoor operation lines: Total length 1km. Digital signal: 10 m or shorter

System example

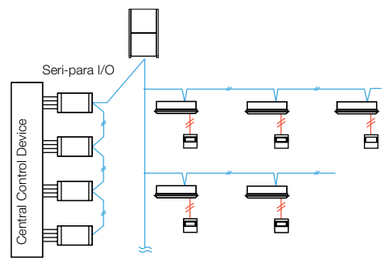

- This unit can control up to 4 outdoor units.
- From the centre control device, mode changing and batch operation/batch stop are possible.
- Required for demand control.

Serial Interface for 3rd Party External Controller

Example of 3rd party BMS connection with CZ-CFUNC2
(For the detail please consult to authorised dealer)

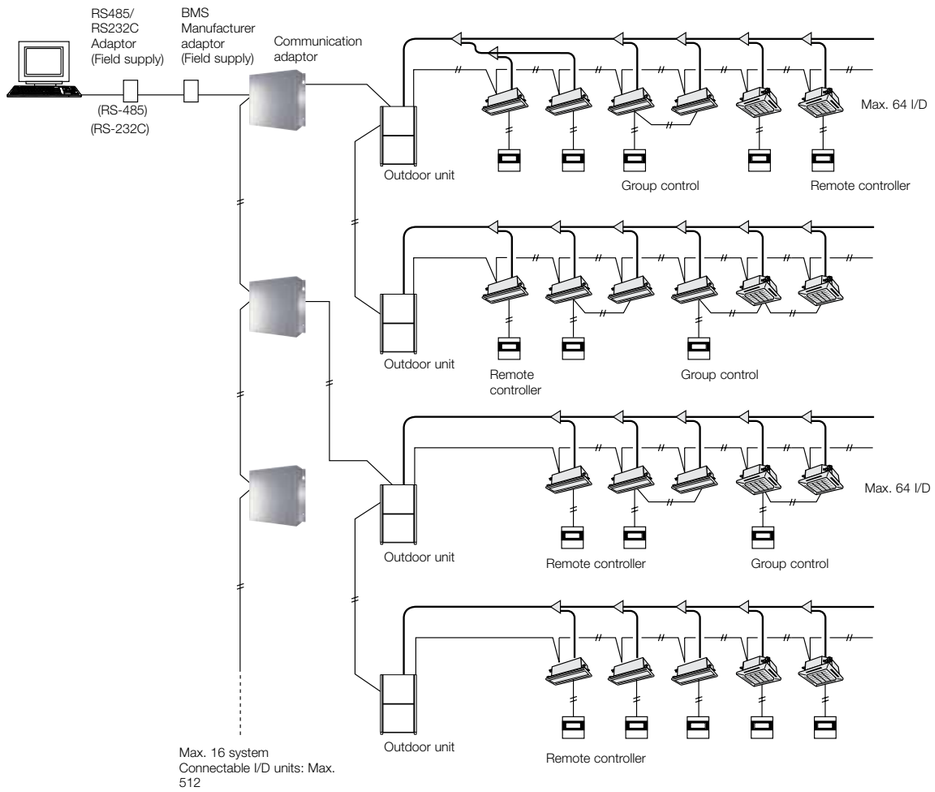

Functions via communication adaptor [CZ-CFUNC2]	
A/C unit settings	Unit ON/OFF
	Mode-change
	Room temperature setting
	Fan speed setting
	Flap setting
	Central control setting
	Filter-sign clear
	Alarm reset
A/C unit status	Unit ON/OFF status
	Operation mode
	Setting temperature
	Fan speed status
	Flap status
	Central control setting
	Filter-sign situation
	Correct/incorrect status
	Alarm code

Communication Adaptor (CZ-CFUNC2)

Up to 128 indoor units can be connected to one Communication Adaptor.

Serial Interface for LonWorks Network

LonWorks Interface (CZ-CLNC2)

- This interface is a communications converter for connecting LonWorks to the control network of FSV.
- From the host connected to LonWorks, basic settings and status monitoring is possible for up to 16 groups of indoor units.

System example

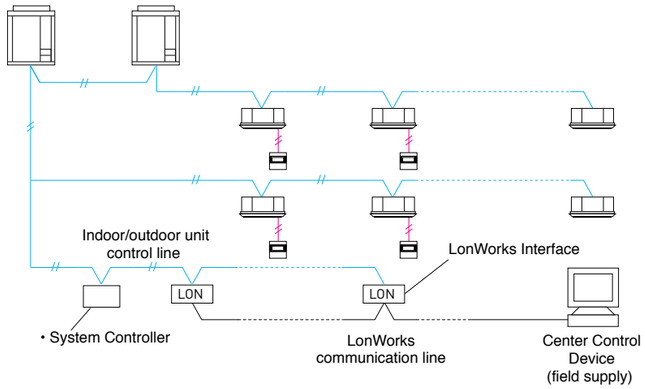

Functions

A/C unit settings from the LonWorks communicator	Settings for each group of indoor units	Start/stop
		Temp. setting
		Operation mode
		Option 1 settings
		Option 2 settings
	Settings for all units	Emergency stop
A/C unit status notifications made to the LonWorks communicator		Start/stop
		Temp setting
		Operation mode
		Option 1 settings
		Option 2 settings
		Alarm status
		Indoor units with active alarms
		Room temp.
		A/C unit status
Configuration properties		Transmission intervals settings
		Minimum time secured for transmission

FSV Controller External Dimensions

DELUXE
WIRED REMOTE
CONTROLLER
(CZ-RTC5B)

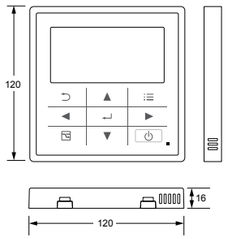

TIMER REMOTE CONTROLLER
(CZ-RTC4)

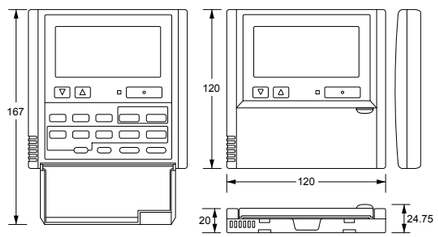

WIRELESS REMOTE
CONTROLLER

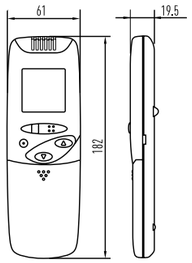

SEPARATE RECEIVER FOR
WIRELESS REMOTE
CONTROLLER
(CZ-RWSC3)

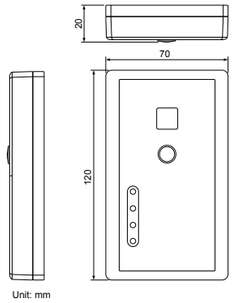

SYSTEM CONTROLLER
(CZ-64ESMC3)

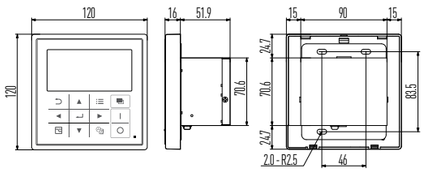

ECONAVI SENSOR
(CZ-CENSC1)

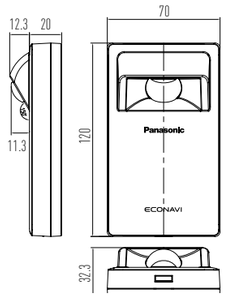

REMOTE SENSOR
(CZ-CSRC3)

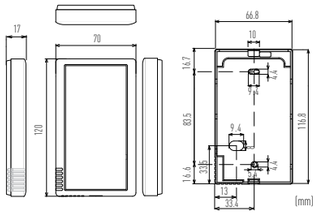

COMMUNICATION ADAPTOR
(CZ-CFUNC2)

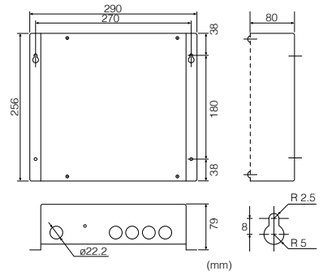

INTELLIGENT CONTROLLER
(CZ-256ESMC3)

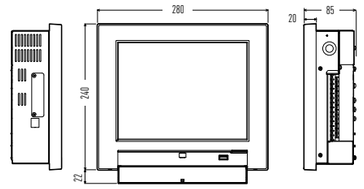

ON/OFF CONTROLLER
(CZ-ANC3)

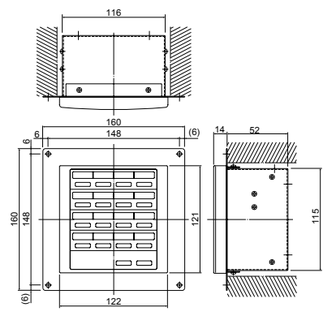

SERI-PARA I/O UNIT FOR EACH INDOOR UNIT
(CZ-CAPBC2)

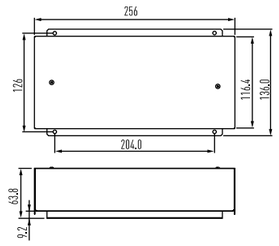

LONWORKS INTERFACE
(CZ-CLNC2)

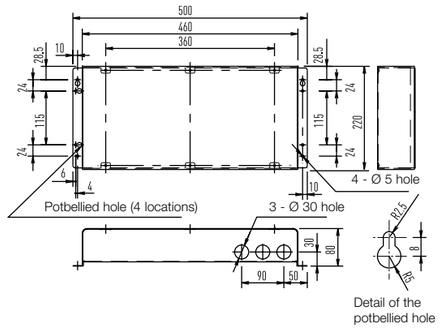

SERI-PARA I /O UNIT FOR OUTDOOR UNIT
(CZ-CAPDC2)

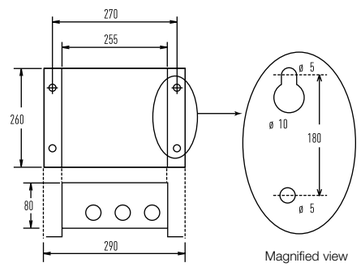

Innovative and Unrivalled Advantages

Colour and Design to Match Office Interiors

Colour combinations and design can be set to match different facilities.

Customisation in 20 Languages Possible

The display can be customised to match the native languages of guests to enable smooth, stress-free communication for hospitality at its finest.

*Currently 6. More languages scheduled for a late 2018 release.

Easy-to-Understand Error Description

Error description during an emergency is easy to understand, enabling staff to respond quickly.

Programmable Logic

Full customisation of remote control logic possible, and updating to match conditions.

Smart Connectivity Devices

Schneider Electric brand - SER8150

SED-WDS-P-5045
Window / Door sensor

SED-CMS-P-5045
Ceiling motion sensor

SED-WMS-P-5045
Wall motion temperature sensor

SED-CO2-G-5045
CO_2 sensor

Features

- Up to 5-year battery life, batteries included
- Battery level is a point
- Sensor points visible in SBO when SER8150 is integrated via BACnet MS/TP
- Sensor status and battery level visible in SBE when SER8150 is integrated via ZigBee® Pro
- Integration to SBE only recommended when each MPM is connected to Ethernet and set as a ZigBee® Coordinator node

Remote Controller	Description
SER8150R0B1194	Panasonic Net Con, RH, No PIR, R1/R2 (Wired)
SER8150R5B1194	Panasonic Net Con, RH, PIR, R1/R2 (Wired)
Interface	**Description**
VCM8000V5094P	Panasonic wireless Zigbee Pro Com.card
VCM8000R94BOX *	Panasonic R1/R2 (Wired) to Zigbee adaptor box No Brand
VCM8000V5094G *	Wireless Zigbee Pro / Green Com card

1. VCM8000V5094P : Required in case wired solution connecting with Zigbee Sensors.
2. VCM8000V5094G : Required in case wired solution need to do MPM connection.
3. As for the products marked with*, the time of release will be announced later.
4. Specifications are subject to change.

Sensor	Description
SED-WMS-P-5045	SED SEN OCC WALL ZP
SED-WDS-P-5045	SED SW DOR/WIN ZP
SED-CMS-P-5045	SED SEN OCC CEIL ZP
SED-CO2-G-5045 *	Wireless Zigbee Green CO2 sensor
Fascia	**Description**
FAS-00	Silver
FAS-01	White
FAS-03	Translucent White
FAS-05	Light Tan Wood
FAS-06	Brown Wood
FAS-07	Dark Brown Wood
FAS-10	Brushed Steel

PAC/VRF Smart Connectivity controller external dimensions

Room Controller SER8150 - Dimensions & Wiring & Specifications

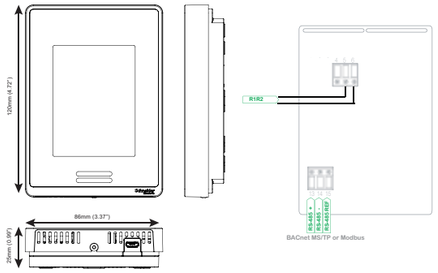

Dimensions
Height: 12cm/4.72in
Width: 8.6cm/3.39in
Depth: 2.7cm/1.06in
Power Requirements
16 Vdc from Panasonic R-R IDU connectors
50/60 Hz, 4VA, Class 2 Supply
Range from Indoor Unit
Recommended 500ft (150 m)
Operating Conditions
0 °C to 50°C (32°F to122°F)
0% to 95% R.H. non-condensing
Storage Conditions
-30°C to 50°C (-22°F to 122°F)
0% to 95% R.H. non-condensing
Temperature Sensor
Local 10 K NTC type 2 thermistor
Temperature Sensor Resolution
± 0.1°C (± 0.2°F)
Temperature Sensor Accuracy
± 0.5°C (± 0.9°F) @ 21°C (70°F) typical calibrated
Humidity Sensor and Calibration
Single point calibrated bulk polymer type sensor

Humidity Sensor Precision
Reading range from 10 to 90 % R.H. non-condensing 10 to 20% precision: 10%
20% to 80% precision: 5%
80% to 90% precision: 10%
Humidity Sensor Stability
Less than 1.0 % yearly (typical drift)
Wiring
Maximum wire length between last indoor unit to SER8150RxB1194 equals 490ft (150m) with AWG #18 wire (0.82 mm ^{2}).
Refer to Panasonic VRF guidelines "Wiring System Diagram for Remote Controller" for this limitation.
Approximate Shipping Weight
0.34 kg (0.75 lb)
Safety Standards All Models
LVD Directive 2006/95/EC
EN 60950-1:2006/A2:2013
UL 873 CSA C22.2 No.24-93
EMC Standards All Models
EMC Directive 2004/108/EC
IEC 61326-1:2005
FCC 15 Subpart B
ICES-003

Radio Standards (Wireless Models)
R&TTE Directive 1999/5/EC
IEC 61326-1:2005
EN 301 489-1 V1.9.2
EN 301 328 V1.8.1
FCC 15 Subpart C, Class A
RSS 210
THIS DEVICE COMPLIES WITH PART 15 OF THE FCC RULES. OPERATION IS SUBJECT TO THE FOLLOWING TWO CONDITIONS: (1) THIS DEVICE MAY NOT CAUSE HARMFUL INTERFERENCE, AND (2) THIS DEVICE MUST ACCEPT ANY INTERFERENCE RECEIVED, INCLUDING INTERFERENCE THAT MAY CAUSE UNDESIRED OPERATION.

Check with your local government for instruction on disposal of these products.

Ceiling Motion Sensor SED-CMS-P-5045 - Dimensions & Wiring & Specifications

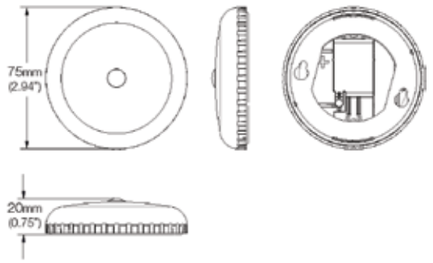

Dimensions	75mm diameter x 20mm thick (2.94in diameter x 0.75in thick)
Colour	White
Weight	50g (1.8oz) with batteries
Communication	ZigBee, HA1.2 Compatible
Communication Range	Up to 40ft (12m), open field 300ft (100m)
Detection Range	Maximum: 90 deg cone, 16.5ft (5m) Recommended: 45 deg, 12ft (3.6m)
Battery Voltage	1.5VDC Alkaline
Battery Cell	2 x AAA (recommended Panasonic LR03XWA)
Battery Life	Up to 5 years
Ambient Temperature	-10°C to +50 °C (+14 °F to +122 °F)

Certification

Check with your local government for instruction on disposal of these products.

Wall Motion Sensor SED-WMS-P-5045 - Dimensions & Wiring & Specifications

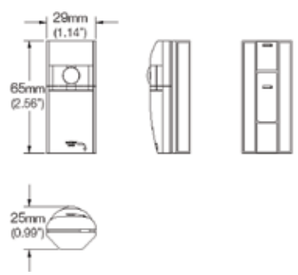

Dimensions	65mm H x 29mm W x 25mm D (2.56in H x 1.14in W x 0.99in D)
Color	White
Weight	30g (1.06oz) with battery
Communication	ZigBee, HA1.2 Compatible
Communication Range	Up to 40ft (12m) open field 300ft (100m)
Detection Range	Maximum: 90 deg cone, 16.5ft (5m) Recommended: 47 deg, 16ft (5m)
Battery Voltage	3.0VDC Lithium
Battery Cell	CR2 (recommended Panasonic CR15H270)
Battery Life	Up to 5 years
Ambient Temperature	-10°C to +50 °C (+14 °F to +122 °F)

Certification

Check with your local government for instruction on disposal of these products.

Door/Window Contact SED-WDS-P-5045 - Dimensions & Wiring & Specifications

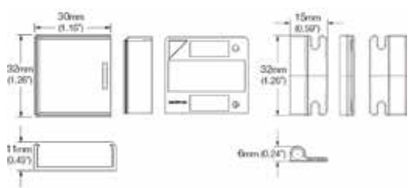

Sensor Dimensions	32mm wide x 30mm high x 11mm thick (1.26in wide x 1.16in high x 0.43in thick)
Magnet Dimensions	15mm wide x 32mm high x 6mm thick (0.59" wide x 1.26" high x 0.24" thick)
Color	White
Weight	11g (0.38oz) with battery
Communication	ZigBee, HA1.2 Compatible
Communication Range	Up to 40ft (12m) open field 300ft (100m)
Battery Voltage	3.0VDC Lithium
Battery Cell	CR2032 (recommended Panasonic CR2032)
Battery Life	Up to 5 years
Ambient Temperature	-10°C to +50 °C (+14 °F to +122 °F)

Certification

Check with your local government for instruction on disposal of these products.