FSV Indoor Units Range

Wide choice of models depending on the indoor requirements

Class	22	28	36	45	56	60	73	90
	Cooling/Heating	Cooling/Heating	Cooling/Heating	Cooling/Heating	Cooling/Heating	Cooling/Heating	Cooling/Heating	Cooling/Heating
Capacity kW / Type	2.2/2.5	2.8/3.2	3.6/4.2	4.5/5.0	5.6/6.3	6.0/7.1	7.3/8.0	9.0/10.0
F2 type ECONAVI **Mid Static Ducted**	S-22MF2E5A	S-28MF2E5A	S-36MF2E5A	S-45MF2E5A	S-56MF2E5A	S-60MF2E5A	S-73MF2E5A	S-90MF2E5A
M1 type ECONAVI **Slim Low Static Ducted**	S-22MM1E5A	S-28MM1E5A	S-36MM1E5A	S-45MM1E5A	S-56MM1E5A			
Z1 type ECONAVI **Slim & Narrow Ducted**	S-22MZ1H4A	S-28MZ1H4A	S-36MZ1H4A	S-45MZ1H4A	S-56MZ1H4A	S-60MZ1H4A	S-73MZ1H4A	
E1/E2 type **High Static Ducted / Energy Saving High-Fresh Air Ducted***							S-73ME1E5	
ER1 type **High Static Compact Ducted**								S-90ME1R5A
K2 type ECONAVI **Wall Mounted**	S-22MK2E5A	S-28MK2E5A	S-36MK2E5A	S-45MK2E5A	S-56MK2E5A		S-73MK2E5A	
U2 type ECONAVI** nanoeX*** **4-Way Cassette** Panel No. CZ-KPU3	S-22MU2E5A	S-28MU2E5A	S-36MU2E5A	S-45MU2E5A	S-56MU2E5A	S-60MU2E5A	S-73MU2E5A	S-90MU2E5A
Y2 type ECONAVI **4-Way Mini Cassette** Panel No. CZ-KPY3AW	S-22MY2E5A	S-28MY2E5A	S-36MY2E5A	S-45MY2E5A	S-56MY2E5A			
L1 type **2-Way Cassette** Panel No. CZ-02KPL2 Panel No. CZ-03KPL2 (Only for S-73ML1E5)	S-22ML1E5	S-28ML1E5	S-36ML1E5	S-45ML1E5	S-56ML1E5		S-73ML1E5	
D1 type **1-Way Cassette** Panel No. CZ-KPD2		S-28MD1E5	S-36MD1E5	S-45MD1E5	S-56MD1E5		S-73MD1E5	
T2 type ECONAVI **Ceiling**			S-36MT2E5A	S-45MT2E5A	S-56MT2E5A		S-73MT2E5A	
P1 type **Floor Standing**	S-22MP1E5	S-28MP1E5	S-36MP1E5	S-45MP1E5	S-56MP1E5		S-71MP1E5	
R1 type **Concealed Floor Standing**	S-22MR1E5	S-28MR1E5	S-36MR1E5	S-45MR1E5	S-56MR1E5		S-71MR1E5	

* Only for High Static Ducted (22.4kW & 28.0kW only)
** Only for CZ-KPU3A (ECONAVI Panel)
*** Only for CZ-CNEXU1 (nanoeX Sensor) with CZ-RTC5B

106	112	140	160	180	224	280	Wireless remote control		
Cooling/Heating	Cooling/Heating	Cooling/Heating	Cooling/Heating	Cooling/Heating	Cooling/Heating	Cooling/Heating	Type with built-in sensor	Type with separately installed sensor	Functions
10.6/11.4	11.2/12.5	14.0/16.0	16.0/18.0	18.0/20.0	22.4/25.0	28.0/31.5			
S-106MF2E5A		S-140MF2E5A	S-160MF2E5A					●	self-diagnosing, Auto fan, Mild dry, Auto restart, Drain pump, DC motor
								●	self-diagnosing, Auto fan, Mild dry, Auto restart, Drain pump, DC motor
								●	self-diagnosing, Auto fan, Mild dry, Auto restart, DC motor
S-106ME1E5		S-140ME1E5		S-180ME2E5	High Fresh Air S-224ME2E5*	High Fresh Air S-280ME2E5*			self-diagnosing, Auto fan, Mild dry (High Static Ducted), Auto restart, DC motor
	S-112ME1R5A	S-140ME1R5A	S-160ME1R5A					●	self-diagnosing, Auto fan, Mild dry, Auto restart
S-106MK2E5A							●	●	self-diagnosing, Auto fan, Mild dry, Auto flap, Auto restart, Air swing, DC motor
S-106MU2E5A		S-140MU2E5A	S-160MU2E5A				●	●	self-diagnosing, Auto fan, Mild dry, Auto flap, Auto restart, Air swing, Drain pump, DC motor
							●	●	self-diagnosing, Auto fan, Mild dry, Auto flap, Auto restart, Air swing, Drain pump, DC motor
							●	●	self-diagnosing, Auto fan, Mild dry, Auto flap, Auto restart, Air swing, Drain pump
							●	●	self-diagnosing, Auto fan, Mild dry, Auto flap, Auto restart, Air swing, Drain pump, DC motor
S-106MT2E5A		S-140MT2E5A					●	●	self-diagnosing, Auto fan, Mild dry, Auto flap, Auto restart, Air swing, DC motor
								●	self-diagnosing, Auto fan, Mild dry, Auto restart
								●	self-diagnosing, Auto fan, Mild dry, Auto restart

Self-diagnosing function · Automatic fan operation · Mild dry · Intelligent auto flap control · Automatic restart function for power failure · Air swing · Built-in drain pump · DC motor

Model Name			S-22MF2E5A	S-28MF2E5A	S-36MF2E5A	S-45MF2E5A	S-56MF2E5A
Power source			220/230/240V, 1 phase - 50/60Hz				
Cooling capacity		kW	2.2	2.8	3.6	4.5	5.6
		BTU/h	7,500	9,600	12,300	15,400	19,100
Heating capacity		kW	2.5	3.2	4.2	5.0	6.3
		BTU/h	8,500	10,900	14,300	17,100	21,500
Power input	Cooling	kW	0.070/0.070/0.070	0.070/0.070/0.070	0.070/0.070/0.070	0.070/0.070/0.070	0.100/0.100/0.100
	Heating	kW	0.070/0.070/0.070	0.070/0.070/0.070	0.070/0.070/0.070	0.070/0.070/0.070	0.100/0.100/0.100
Running amperes	Cooling	A	0.60/0.57/0.56	0.60/0.57/0.56	0.60/0.57/0.56	0.60/0.57/0.56	0.77/0.74/0.71
	Heating	A	0.60/0.57/0.56	0.60/0.57/0.56	0.60/0.57/0.56	0.60/0.57/0.56	0.77/0.74/0.71
Fan motor	Type		Sirocco fan	Sirocco fan	Sirocco fan	Sirocco fan	Sirocco fan
	Air flow rate (H/M/L)	m³/h	840/780/600	840/780/600	840/780/600	840/780/600	960/900/720
		L/s	233/217/167	233/217/167	233/217/167	267/250/220	267/250/220
	Output	kW	0.119	0.119	0.119	0.119	0.119
	External static pressure	Pa	70(10-150)	70(10-150)	70(10-150)	70(10-150)	70(10-150)
Power sound level (H/M/L)		dB(A)	55/51/47	55/51/44	55/51/44	56/54/47	56/54/47
Sound pressure sound (H/M/L)		dB(A)	33/29/25	33/29/22	33/29/22	34/32/25	34/32/25
Dimensions	H x W x D	mm	290x800x700	290x800x700	290x800x700	290x800x700	290x800x700
Pipe connections	Liquid	mm (inches)	Ø6.35 (Ø1/4)	Ø6.35 (Ø1/4)	Ø6.35 (Ø1/4)	Ø6.35 (Ø1/4)	Ø6.35 (Ø1/4)
	Gas	mm (inches)	Ø12.7 (Ø1/2)	Ø12.7 (Ø1/2)	Ø12.7 (Ø1/2)	Ø12.7 (Ø1/2)	Ø12.7 (Ø1/2)
	Drain piping		VP-25	VP-25	VP-25	VP-25	VP-25
Net weight		kg	29	29	29	29	29

GLOBAL REMARKS	Rated conditions:	Cooling	Heating
	Indoor air temperature	27℃ DB / 19℃ WB	20℃ DB
	Outdoor air temperature	35℃ DB / 24℃ WB	7℃ DB / 6℃ WB

Specifications are subject to change without notice.

F2 TYPE MID STATIC DUCTED Dimensions

SIZE 22-56 MF2E5A

1 Refrigerant piping joint (liquid tube) Ø6.35 Flare
2 Refrigerant piping joint (gas tube) Ø12.7 Flare
3 Upper drain port VP25 (O.D. Ø32mm)
ℓ 200 flexible hose supplied
4 Bottom drain port VP25 (O.D. Ø32mm)
5 Suspension lug (4-12 × 30mm)
6 Power supply outlet
7 Fresh air intake port (Ø150mm)
8 Flange for flexible air outlet duct
9 Electrical component box

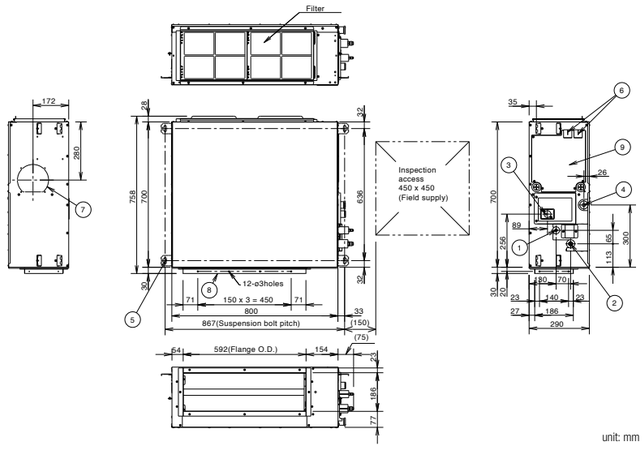

unit: mm

S-60MF2E5A	S-73MF2E5A	S-90MF2E5A	S-106MF2E5A	S-140MF2E5A	S-160MF2E5A
	220/230/240V, 1 phase - 50/60Hz				
6.0	7.3	9.0	10.6	14.0	16.0
20,500	24,900	30,700	36,200	47,800	54,600
7.1	8.0	10.0	11.4	16.0	18.0
24,200	27,300	34,100	38,900	54,600	61,400
0.120/0.120/0.120	0.120/0.120/0.120	0.135/0.135/0.135	0.195/0.195/0.195	0.215/0.215/0.215	0.225/0.225/0.225
0.120/0.120/0.120	0.120/0.120/0.120	0.135/0.135/0.135	0.200/0.200/0.200	0.210/0.210/0.210	0.225/0.225/0.225
0.91/0.89/0.87	0.91/0.89/0.87	0.99/0.97/0.95	1.35/1.30/1.27	1.48/1.44/1.39	1.55/1.50/1.47
0.91/0.89/0.87	0.91/0.89/0.87	0.99/0.97/0.95	1.37/1.34/1.29	1.46/1.42/1.38	1.55/1.50/1.46
Sirocco fan	Sirocco fan	Sirocco fan	Sirocco fan	Sirocco fan	Sirocco fan
1,260/1,140/900	1,260/1,140/900	1,500/1,380/1,140	1,920/1,620/1,320	2,040/1,740/1,380	2,160/1,860/1,500
350/317/250	350/317/250	417/383/317	533/450/367	567/483/383	600/517/417
0.124	0.124	0.124	0.235	0.235	0.235
70(10-150)	70(10-150)	70(10-150)	100(10-150)	100(10-150)	100(10-150)
57/54/48	57/54/48	59/56/50	60/56/53	61/57/54	62/58/55
35/32/26	35/32/26	37/34/28	38/34/31	39/35/32	40/36/33
290x1,000x700	290x1,000x700	290x1,000x700	290x1,400x700	290x1,400x700	290x1,400x700
Ø6.35 (Ø1/4)	Ø9.52 (Ø3/8)	Ø9.52 (Ø3/8)	Ø9.52 (Ø3/8)	Ø9.52 (Ø3/8)	Ø9.52 (Ø3/8)
Ø12.7 (Ø1/2)	Ø15.88 (Ø5/8)	Ø15.88 (Ø5/8)	Ø15.88 (Ø5/8)	Ø15.88 (Ø5/8)	Ø15.88 (Ø5/8)
VP-25	VP-25	VP-25	VP-25	VP-25	VP-25
34	34	34	46	46	46

SIZE 60-90 MF2E5A

1 Refrigerant piping joint (liquid tube) Ø9.52 Flare
2 Refrigerant piping joint (gas tube) Ø15.88 Flare
3 Upper drain port VP25 (O.D. Ø32mm)
ℓ 200 flexible hose supplied
4 Bottom drain port VP25 (O.D. Ø32mm)
5 Suspension lug (4-12 × 30mm)
6 Power supply outlet
7 Fresh air intake port (Ø150mm)
8 Flange for flexible air outlet duct
9 Electrical component box

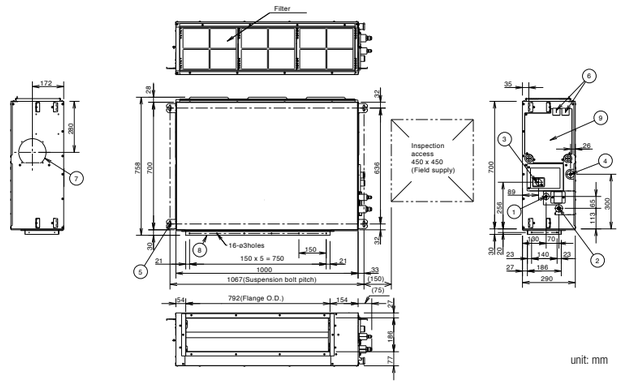

unit: mm

SIZE 106-160 MF2E5A

1 Refrigerant piping joint (liquid tube) Ø9.52 Flare
2 Refrigerant piping joint (gas tube) Ø15.88 Flare
3 Upper drain port VP25 (O.D. Ø32mm)
ℓ 200 flexible hose supplied
4 Bottom drain port VP25 (O.D. Ø32mm)
5 Suspension lug (4-12 × 30mm)
6 Power supply outlet
7 Fresh air intake port (Ø150mm)
8 Flange for flexible air outlet duct
9 Electrical component box

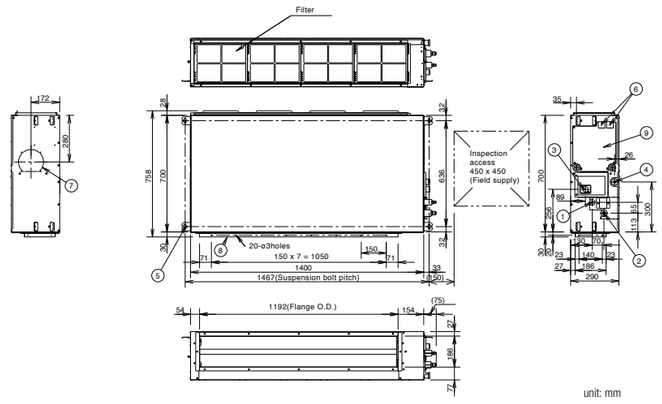

unit: mm

M1 TYPE Slim Low Static Ducted

Concealed duct

Featuring a height of only 200mm, greater flexibility and adaptability, the ultra slim M1 Type is the perfect solution for a variety of applications, especially residential apartments, hotels and small offices.

S-22MM1E5A / S-28MM1E5A / S-36MM1E5A
S-45MM1E5A / S-56MM1E5A

ECONAVI

ECONAVI ready

CZ-CENSC1 CZ-RTC5B

For all indoor units
CZ-RWSK2 +
CZ-RWSC3

Self-diagnosing Function | Automatic Fan Operation | Mild dry | Automatic Restart Function | Built-in Drain Pump

Technical focus

- Ultra-slim profile: 200mm for all models
- DC fan motor greatly reduces power consumption
- Ideal for hotel application with very narrow false ceilings
- Anti-mould washable filters included
- Easy maintenance and service by external electrical box
- 40Pa static pressure enables ductwork to be fitted.
- Up to 653mm drain pump

Ultra-slim profile for all models

200mm height for all models allows installation in very narrow ceilings.

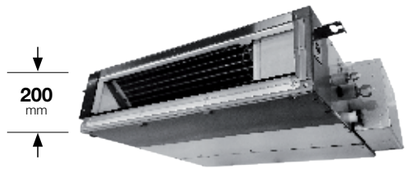

Drain pump with increased power!

Using the built-in high-lift drain pump, the drain piping rise height can be increased to 653mm from the lower surface of the body.

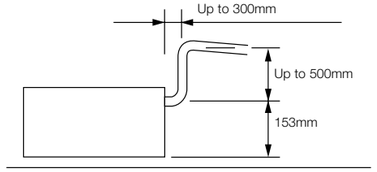

Model Name			S-22MM1E5A	S-28MM1E5A	S-36MM1E5A	S-45MM1E5A	S-56MM1E5A
Power source			220/230/240 V, 1 phase - 50 / 60 Hz				
Cooling capacity		kW	2.2	2.8	3.6	4.5	5.6
		BTU/h	7,500	9,600	12,300	15,400	19,100
Heating capacity		kW	2.5	3.2	4.2	5.0	6.3
		BTU/h	8,500	10,900	14,300	17,100	21,500
Power input	Cooling	kW	0.036/0.036/0.036	0.040/0.040/0.040	0.042/0.042/0.042	0.049/0.049/0.049	0.064/0.064/0.064
	Heating	kW	0.026/0.026/0.026	0.030/0.030/0.030	0.032/0.032/0.032	0.039/0.039/0.039	0.054/0.054/0.054
Running current	Cooling	A	0.26/0.26/0.26	0.30/0.30/0.30	0.31/0.31/0.31	0.37/0.37/0.37	0.48/0.48/0.48
	Heating	A	0.23/0.23/0.23	0.27/0.27/0.27	0.28/0.28/0.28	0.34/0.34/0.34	0.45/0.45/0.45
Fan	Type		Sirocco fan	Sirocco fan	Sirocco fan	Sirocco fan	Sirocco fan
	Air flow rate (H/M/L)	m³/h	480/420/360	510/450/390	540/480/420	630/570/480	750/690/600
		L/s	133/117/100	142/125/108	150/133/117	175/158/133	208/192/167
	Motor output	kW	0.06	0.06	0.06	0.06	0.06
	External static pressure	Pa	10 (30)	15 (30)	15 (40)	15 (40)	15 (40)
Sound power level (H/M/L)		dB	43/42/40	45/44/42	47/45/43	49/47/45	50/48/46
Sound pressure level (H/M/L)		dB(A)	28/27/25 (30/29/27)*	30/29/27 (32/31/29)*	32/30/28 (34/32/30)*	34/32/30 (36/34/32)*	35/33/31 (37/35/32)*
Dimensions	H x W x D	mm	200 x 750 x 640	200 x 750 x 640	200 x 750 x 640	200 x 750 x 640	200 x 750 x 640
Pipe connections	Liquid	mm (inches)	Ø6.35 (Ø1/4)	Ø6.35 (Ø1/4)	Ø6.35 (Ø1/4)	Ø6.35 (Ø1/4)	Ø6.35 (Ø1/4)
	Gas	mm (inches)	Ø12.7 (Ø1/2)	Ø12.7 (Ø1/2)	Ø12.7 (Ø1/2)	Ø12.7 (Ø1/2)	Ø12.7 (Ø1/2)
	Drain piping		VP-20	VP-20	VP-20	VP-20	VP-20
Net weight		kg	19	19	19	19	19

GLOBAL REMARKS	Rated conditions:	Cooling	Heating
	Indoor air temperature	27°C DB / 19°C WB	20°C DB
	Outdoor air temperature	35°C DB / 24°C WB	7°C DB / 6°C WB

Specifications are subject to change without notice.

* With booster cable.

M1 TYPE SLIM LOW STATIC DUCTED Dimensions

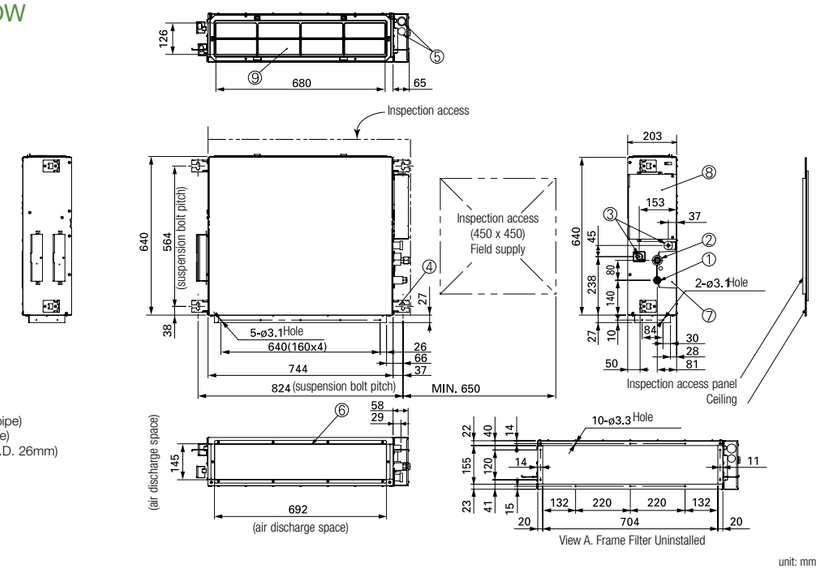

1 Refrigerant piping joint (narrow pipe)
2 Refrigerant piping joint (wide pipe)
3 Upper and bottom drain port (O.D. 26mm)
4 Suspension lug
5 Power supply outlet (2- Ø30)
6 Flange for air intake duct
7 PI cover
8 Electrical component box
9 Frame filter

unit: mm

INDOOR UNITS / Z1 TYPE

Z1 TYPE Slim & Narrow Ducted

Concealed duct

Featuring a height of only 200mm, greater flexibility and adaptability, the slim and narrow Z1 Type is the perfect solution for a variety of applications. In addition, high efficiency and an extremely low noise level make it highly suitable for hotels and small offices.

S-22MZ1H4A/ S-28MZ1H4A/ S-36MZ1H4A/
S-45MZ1H4A/ S-56MZ1H4A/ S-60MZ1H4A

S-73MZ1H4A

ECONAVI

ECONAVI ready

CZ-CENSC1

CZ-RTC5B

For all indoor units
CZ-RWSK2 +
CZ-RWSC3

Self-diagnosing Function | Automatic Fan Operation | Mild dry | Automatic Restart Function

Technical focus

- Ultra-slim profile: 200mm for all models
- DC fan motor greatly reduces power consumption
- Ideal for hotel application with very narrow false ceilings
- Easy maintenance and service by external electrical box
- 29Pa static pressure enables ductwork to be fitted.
- Up to 700mm drain pump (optional)

Ultra-slim profile for all models

200mm height for all models allows installation in very narrow ceilings.

Drain pump with increased power! (optional)

Using the optional high-lift drain pump, the drain piping rise height can be increased to 700mm from the drain pipe port. (Please refer to technical documents for further details)

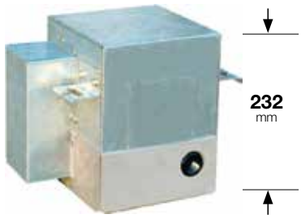

CZ-73DMZ1

Model Name			S-22MZ1H4A	S-28MZ1H4A	S-36MZ1H4A	S-45MZ1H4A	S-56MZ1H4A	S-60MZ1H4A	S-73MZ1H4A
Power source			220/230/240 V, 1 phase - 50 / 60 Hz						
Cooling capacity		kW	2.2	2.8	3.6	4.5	5.6	6.0	7.3
		BTU/h	7,500	9,500	12,200	15,300	19,100	20,500	24,900
Heating capacity		kW	2.5	3.2	4.2	5.1	6.4	7.1	8.0
		BTU/h	8,500	10,900	14,300	17,400	21,800	24,200	27,300
Power input	Cooling	kW	0.075/0.075/0.075	0.080/0.080/0.080	0.085/0.085/0.085	0.095/0.095/0.095	0.100/0.100/0.100	0.100/0.100/0.100	0.125/0.125/0.125
	Heating	kW	0.075/0.075/0.075	0.080/0.080/0.080	0.085/0.085/0.085	0.095/0.095/0.095	0.100/0.100/0.100	0.100/0.100/0.100	0.125/0.125/0.125
Running current	Cooling	A	0.50/0.47/0.45	0.55/0.52/0.50	0.60/0.57/0.55	0.70/0.68/0.65	0.75/0.72/0.70	0.75/0.72/0.70	0.80/0.78/0.75
	Heating	A	0.50/0.47/0.45	0.55/0.52/0.50	0.60/0.57/0.55	0.70/0.68/0.65	0.75/0.72/0.70	0.75/0.72/0.70	0.80/0.78/0.75
Fan	Type		Sirroco fan	Sirroco fan	Sirroco fan	Sirroco fan	Sirroco fan	Sirroco fan	Sirroco fan
	Air flow rate (H/M/L)	m³/h	480/420/360	600/540/420	600/540/420	690/630/510	720/660/540	870/750/630	1,080/840/660
		L/s	133/117/100	167/150/117	167/150/117	192/175/142	200/183/150	242/208/175	300/233/183
	Motor output	W	60	60	60	60	60	60	60
	External static pressure	Pa	10-30	10-30	10-30	10-30	10-30	10-30	10-30
Sound power level (H/M/L)		dB	50/49/47	52/51/49	54/52/50	56/54/52	57/55/53	60/57/55	62/60/58
Sound pressure level (H/M/L)		dB(A)	28/27/25	30/29/27	32/30/28	34/32/30	35/33/31	38/35/33	40/38/36
Dimensions	H x W x D	mm	200x830×500	200x830×500	200x830×500	200x830×500	200x830×500	200x830×500	200x1,050×550
Pipe connections	Liquid	mm (inches)	Ø6.35 (Ø1/4)	Ø6.35 (Ø1/4)	Ø6.35 (Ø1/4)	Ø6.35 (Ø1/4)	Ø6.35 (Ø1/4)	Ø6.35 (Ø1/4)	Ø9.52 (Ø3/8)
	Gas	mm (inches)	Ø12.7 (Ø1/2)	Ø12.7 (Ø1/2)	Ø12.7 (Ø1/2)	Ø12.7 (Ø1/2)	Ø12.7 (Ø1/2)	Ø12.7 (Ø1/2)	Ø15.88 (Ø5/8)
	Drain piping		O.D. Ø20.5 mm / I.D. Ø15.5mm	O.D. Ø20.5 mm / I.D. Ø15.5mm	O.D. Ø20.5 mm / I.D. Ø15.5mm	O.D. Ø20.5 mm / I.D. Ø15.5mm	O.D. Ø20.5 mm / I.D. Ø15.5mm	O.D. Ø20.5 mm / I.D. Ø15.5mm	O.D. Ø20.5 mm / I.D. Ø15.5mm
Net weight		kg	17	17	18	18	18	18	24

GLOBAL REMARKS	Rated conditions:	Cooling	Heating
	Indoor air temperature	27℃ DB / 19℃ WB	20℃ DB
	Outdoor air temperature	35℃ DB / 24℃ WB	7℃ DB / 6℃ WB

Specifications are subject to change without notice.

Z1 TYPE SLIM & NARROW DUCTED Dimensions

SIZE 22-60MZ1H4A

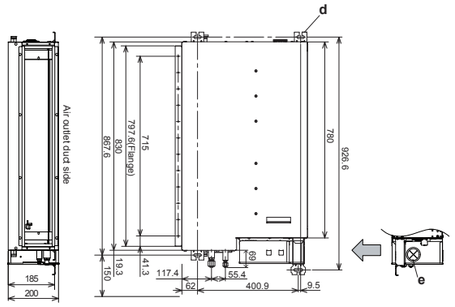

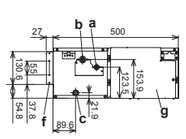

SIZE 73MZ1H4A

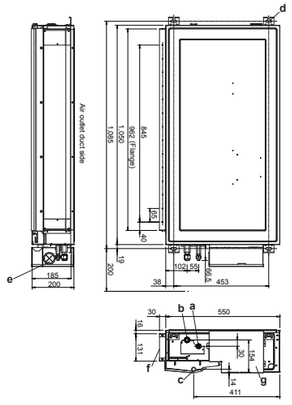

a) Refrigerant piping joint (liquid pipe)
b) Refrigerant piping joint (gas pipe)
c) Bottom drain port O.D.Ø20.5mm / I.D. Ø15.5mm
d) Suspension lug (4 – 12 × 30mm)
e) Power supply outlet
f) Flange for flexible air outlet duct
g) Electrical component box

unit: mm

INDOOR UNITS / E1 TYPE

E1 TYPE High Static Ducted

Concealed duct

The E1 range of ducted units offers improved design flexibility for extended duct layouts as a result of their increased external static pressures.

S-73ME1E5 /
S-106ME1E5 / S-140ME1E5

CZ-RTC5B

Self-diagnosing Function

Automatic Fan Operation

Mild dry

Automatic Restart Function

Technical focus

- Complete flexibility for ductwork design
- Can be located into a weatherproof housing for external installation
- Up to 186Pa external static pressure (in the case of S-73ME1E5)
- Discharge air temperature control to reduce cold drafts during heating operation
- Up to 600L/s airflow (in the case of S-140ME1E5)

System example

An inspection port (450 x 450mm or more) is required at the lower side of the indoor unit body (field supply).

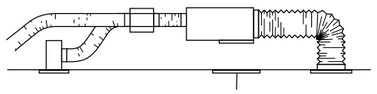

Discharge air temperature control

- Able to control discharge air temperature for accurate room temperature control.
- Possible to reduce cold drafts during heating operation.

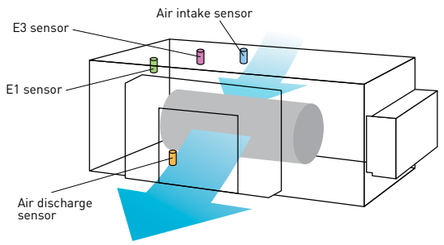

Model Name			S-73ME1E5	S-106ME1E5	S-140ME1E5
Power source			240 V, 1 phase - 50Hz		
Cooling capacity		kW	7.3	10.6	14.0
		BTU/h	25,000	36,000	47,800
Heating capacity		kW	8.0	11.4	16.0
		BTU/h	27,000	39,000	54,600
Power input	Cooling	kW	0.530	0.570	0.710
	Heating	kW	0.530	0.570	0.710
Running current	Cooling	A	2.31	2.47	3.00
	Heating	A	2.31	2.47	3.00
Fan	Type		Sirocco fan	Sirocco fan	Sirocco fan
	Air flow rate (H/M/L)	L/s	383/367/350	500/467/417	600/583/550
	Motor output	kW	0.2	0.2	0.35
	External static pressure	Pa	186	176	167
Sound power level (H/M/L)		dB	55/54/53	56/55/53	58/57/55
Sound pressure level (H/M/L)		dB(A)	44/43/42	45/44/42	47/46/44
Dimensions	H x W x D	mm	420 x 1,065 x 620	420 x 1,065 x 620	450 x 1,065 x 620
Pipe connections	Liquid	inches (mm)	3/8 (Ø9.52)	3/8 (Ø9.52)	3/8 (Ø9.52)
	Gas	inches (mm)	5/8 (Ø15.88)	5/8 (Ø15.88)	5/8 (Ø15.88)
	Drain piping		VP-25	VP-25	VP-25
Net weight		kg	47	50	54

Specifications subject to change without notice.

GLOBAL REMARKS	Rated conditions:	Cooling	Heating
	Indoor air temperature	27°C DB / 19°C WB	20°C DB
	Outdoor air temperature	35°C DB / 24°C WB	7°C DB / 6°C WB

E1 TYPE HIGH STATIC DUCTED Dimensions

SIZE 73-140

1 Refrigerant liquid line (ø9.52)
2 Refrigerant gas line (ø15.88)
3 Power supply entry
4 Drain connection (20A / VP25)
5 Duct connection for suction
6 Duct connection for discharge

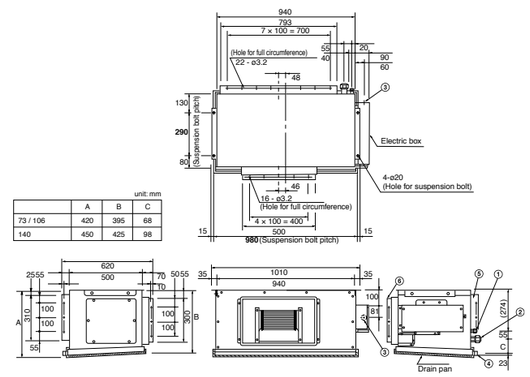

unit: mm

	A	B	C
73 / 106	420	395	68
140	450	425	98

E2 TYPE High Static Ducted

Concealed duct

High static and large airflow ducted for exceptional installation flexibility.

S-180ME2E5 / S-224ME2E5 / S-280ME2E5

CZ-RTC5B

For all indoor units
CZ-RWSK2 +
CZ-RWSC3

Self-diagnosing Function | Automatic Fan Operation | Mild dry | Automatic Restart Function

Technical focus

- Design flexibility thanks to high static pressure and large air volume
- DC motor equipped
- Discharge air temperature control to reduce cold drafts during heating operation
- Available Fresh Air Intake mode

3-step static pressure set up

You can select between the three static pressure modes of 270Pa/ 140Pa/ 60 (72*)Pa for extra installation flexibility.

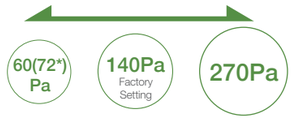

* 28kW model

Up to 270Pa static pressure setting

A maximum static pressure setting of a high 270Pa enables the use of long ducts for installation in a wide range of spaces. Ideal for large-scale offices, restaurants and other facilities.

Sensible cooling 5-10% improved

New heat exchanger with ϕ7mm pipe that increases the heat transfer surface to improve sensible cooling (5-10% improvement)

Discharge air temperature control

- Equipped with 4 sensors (Intake/ Discharge)
- Able to control discharge air temperature for accurate room temperature control.
- Possible to reduce cold drafts during heating operation.

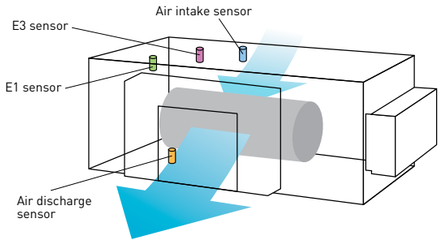

Model	Operation	Rap valve kit **CZ-P160RVK2**	3-PIPE control PCB **CZ-CAPE2**	3-PIPE valve kit **CZ-P160HR3**	3-PIPE valve kit multiple connection port type 4 port **CZ-P4160HR3** (160 type)	Distribution Joint kit <2pipes> **CZ-P160BK2** for 22.4kW unit or less **CZ-P680BK2** for more than 22.4kW	Distribution Joint kit <3pipes> **CZ-P224BH2** for 22.4kW unit **CZ-P680BH2** for 28.0kW unit
					X 4pcs		
E2 Type **High Static Ducted**	Cooling Only	-	-	-	-	-	-
	Cool or Heat	-	-	-	-	-	-
	Heat Recovery	-	2pcs	2pcs	use 2ports	1pc	1pc

Model Name			S-180ME2E5	S-224ME2E5	S-280ME2E5
Power source			220/230/240 V, 1 phase - 50/60Hz		
Cooling capacity		kW	18.0	22.4	28.0
		BTU/h	61,400	76,400	95,500
Heating capacity		kW	20.0	25.0	31.5
		BTU/h	68,200	85,300	107,500
Power input	Cooling	kW	0.400	0.440	0.715
	Heating	kW	0.400	0.440	0.715
Running current	Cooling	A	2.40 / 2.30 / 2.20	2.55 / 2.45 / 2.35	3.95 / 3.85 / 3.70
	Heating	A	2.40 / 2.30 / 2.20	2.55 / 2.45 / 2.35	3.95 / 3.85 / 3.70
Fan	Type		Sirocco fan	Sirocco fan	Sirocco fan
	Air flow rate (H/M/L)	m³/h	2,940 / 2,640 / 2,340	3,360 / 3,060 / 2,640	4,320 / 3,780 / 3,180
		L/s	817 / 733 / 650	933 / 850 / 733	1,200 / 1,050 / 883
	External static pressure	Pa	140 (60/270)	140 (60/270)	140 (72/270)
Sound power level (H/M/L)		dB	76 / 74 / 72	77 / 75 / 73	81 / 79 / 75
Sound pressure level (H/M/L)		dB(A)	44 / 42 / 40	45 / 43 / 41	49 / 47 / 43
Dimensions	H x W x D	mm	479 x 1,453 x 1,205	479 x 1,453 x 1,205	479 x 1,453 x 1,205
Pipe connections	Liquid	mm (inches)	Ø9.52 (3/8)	Ø9.52 (3/8)	Ø9.52 (3/8)
	Gas	mm (inches)	Ø19.05 (3/4)	Ø19.05 (3/4)	Ø22.22 (7/8)
	Drain piping		VP-25	VP-25	VP-25
Net weight		kg	102	102	106

GLOBAL REMARKS	Rated conditions:	Cooling	Heating
	Indoor air temperature	27℃ DB / 19℃ WB	20℃ DB
	Outdoor air temperature	35℃ DB / 24℃ WB	7℃ DB / 6℃ WB

Specifications are subject to change without notice.

E2 TYPE HIGH STATIC DUCTED Dimensions

1 Refrigerant piping (liquid pipes) Ø9.52
2 Refrigerant piping (gas pipes)
180 & 224 type: Ø19.05, 280 type: Ø22.22
3 Power supply outlet (Ø25 grommet, rubber)
4 Power supply outlet (spare) (Ø30 knock-out)
5 Optional outlet for piping
6 Drain port 25 A, male thread
7 Duct connection for suction
8 Duct connection for discharge

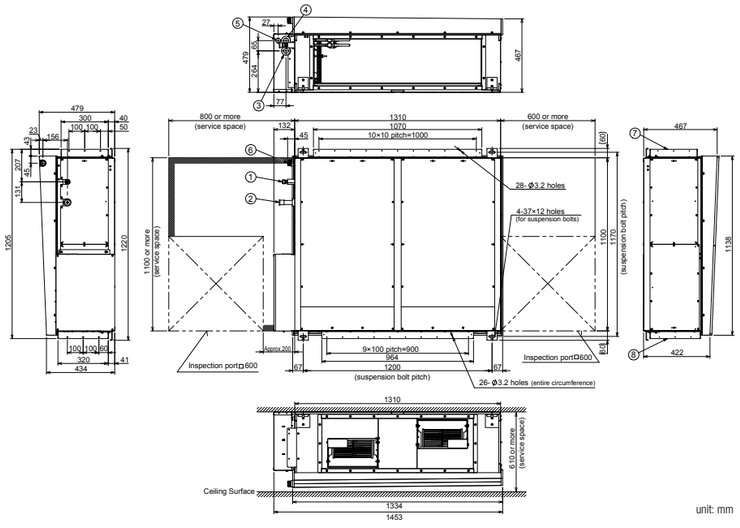

INDOOR UNITS / E2 TYPE

E2 TYPE Energy Saving High Fresh Air Ducted

Concealed duct

High static and large airflow ducted for exceptional installation flexibility.

S-224ME2E5 /
S-280ME2E5

CZ-RTC5B

For all indoor units
CZ-RWSK2 +
CZ-RWSC3

Self-diagnosing Function | Automatic Fan Operation | Automatic Restart Function

Technical focus

- 100% fresh air intake for ventilation purpose
- Design flexibility with high static pressure and large air volume
- DC motor equipped
- Discharge air temperature control to reduce cold drafts during heating operation

High Fresh System

High Fresh System enables delivery of fresh outside air at almost the same temperature and humidity as indoor air without putting a burden on air conditioning.
* Capable of treating outdoor air only. Indoor air conditioner units are required to adjust indoor air temperature.

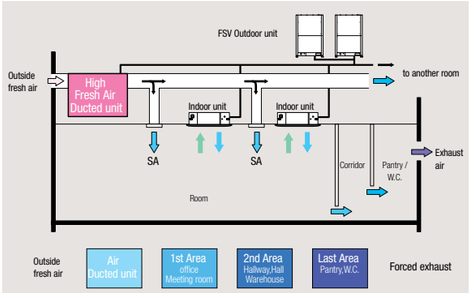

Mix operation unit with standard indoor units

Possible to combine High Fresh Air ducted indoor unit and standard air ducted indoor units.
When other indoor units are connected in same circuit, keep following capacity ratio.
E2 type/ Outdoor unit < 30%, and Total of indoors (incl. E2) /outdoor <100%

Discharge air temperature control

- Equipped with 4 sensors (Intake/ Discharge)
- Ability to control discharge air temperature for accurate room temperature control.
- Ability to reduce cold drafts during heating operation.

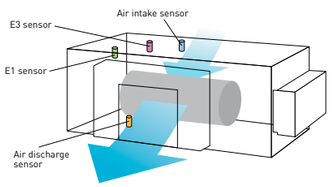

Installation Conditions

Model	Operation	Rap valve kit **CZ-P160RVK2**	3-PIPE control PCB **CZ-CAPE2**	3-PIPE valve kit **CZ-P160HR3**	Distribution Joint kit <2pipes> **CZ-P160BK2** for 22.4kW unit or less **CZ-P680BK2** for more than 22.4kW	Distribution Joint kit <3pipes> **CZ-P224BH2** for 22.4kW unit **CZ-P680BH2** for 28.0kW unit
E2 Type **Energy Saving High-Fresh Air Ducted**	Cooling Only	-	-	-	-	-
	Cool or Heat	2pcs	2pcs	-	2pcs	-
	Heat Recovery	-	2pcs	2pcs	1pc	1pc

Model Name			S-224ME2E5	S-280ME2E5
Power source			220/230/240 V, 1 phase - 50/60Hz	
Cooling capacity		kW	22.4	28.0
		BTU/h	76,400	95,500
Heating capacity		kW	21.2	26.5
		BTU/h	72,300	90,400
Power input	Cooling	kW	0.290	0.350
	Heating	kW	0.290	0.350
Running current	Cooling	A	1.90/1.85/1.80	2.30/2.20/2.10
	Heating	A	1.90/1.85/1.80	2.30/2.20/2.10
Fan	Type		Sirocco fan	Sirocco fan
	Air flow rate	m³/h	1,700	2,100
		L/s	472	583
	Motor output	W	560	750
	External static pressure	Pa	200	200
Sound power level		dB	75	76
Sound pressure level		dB(A)	43	44
Dimensions	H x W x D	mm	479 x 1,453 x 1,205	479 x 1,453 x 1,205
Pipe connections	Liquid	mm (inches)	Ø9.52 (Ø3/8)	Ø9.52 (Ø3/8)
	Gas	mm (inches)	Ø19.05 (Ø3/4)	Ø22.22 (Ø7/8)
	Drain piping		VP-25	VP-25
Net weight		kg	102	106

GLOBAL REMARKS	Rated conditions:	Cooling	Heating
	Outdoor air temperature	33°C DB / 28°C WB	0°C DB / -2.9°C WB

Specifications are subject to change without notice.

E2 TYPE HIGH STATIC DUCTED Dimensions

1 Refrigerant piping (liquid pipes) Ø9.52
2 Refrigerant piping (gas pipes)
224 type: Ø19.05, 280 type: Ø22.22
3 Power supply outlet (Ø25 grommet, rubber)
4 Power supply outlet (spare) (Ø30 knock-out)
5 Optional outlet for piping
6 Drain port 25 A, male thread
7 Duct connection for suction
8 Duct connection for discharge

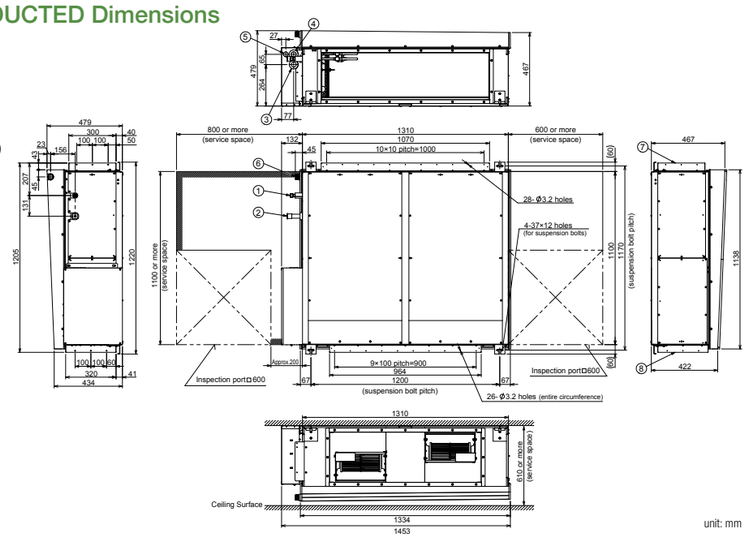

INDOOR UNITS / E1 TYPE

E1 TYPE High Static Compact Ducted

Concealed duct

Hidden in the ceiling to provide an ideal match for luxury residences and light commercial buildings.

S-90ME1R5A/
S-112ME1R5A

S-140ME1R5A/
S-160ME1R5A

ECONAVI
ECONAVI ready

CZ-RTC5B

For all indoor units
CZ-RWSK2 +
CZ-RWSC3

Self-diagnosing Function | Automatic Fan Operation | Mild dry | Automatic Restart Function

Technical focus

- Complete flexibility for ductwork design
- Can be located into a weatherproof housing for external installation
- Up to 150Pa external static pressure
- Discharge air temperature control to reduce cold drafts during heating operation
- Up to 1000 L/s air flow (in the case of S-160ME1R5A)

System Example

An inspection port (450mm x 450mm or more) is required at the control-box side of the indoor unit body.

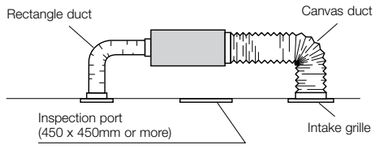

Compact Body Size

Hidden in the ceiling, ideal when interior decor is an important consideration such as in residences with many rooms and light commercial buildings.

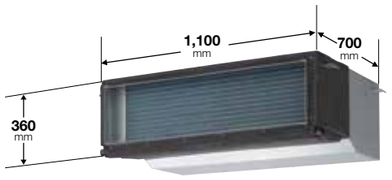

S-90ME1R5A / S-112ME1R5A

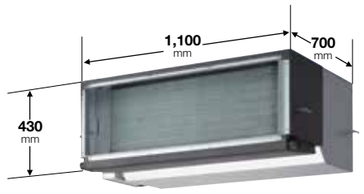

S-140ME1R5A / S-160ME1R5A

Model Name			S-90ME1R5A	S-112ME1R5A	S-140ME1R5A	S-160ME1R5A
Power source			230/240 V, 1 phase - 50Hz			
Cooling capacity		kW	9.0	11.2	14.0	16.0
		BTU/h	30,700	38,200	47,800	54,600
Heating capacity		kW	10.0	12.5	16.0	18.0
		BTU/h	34,100	42,700	54,600	61,400
Power input	Cooling	kW	0.275/0.290	0.390/0.410	0.410/0.430	0.590/0.640
	Heating	kW	0.275/0.290	0.390/0.410	0.410/0.430	0.590/0.640
Running current	Cooling	A	1.24/1.25	1.72/1.74	1.82/1.84	2.62/2.70
	Heating	A	1.24/1.25	1.72/1.74	1.82/1.84	2.62/2.70
Fan	Type		Sirocco fan	Sirocco fan	Sirocco fan	Sirocco fan
	Air flow rate (H/M/L)	m³/h	1,800/1,560/1,320	2,400/2,100/1,740	3,000/2,760/2,160	3,600/3,000/2,520
		L/s	500/433/366	666/583/483	833/766/600	1,000/833/700
	Motor output	kW	0.155	0.275	0.310	0.44
	External static pressure	Pa	100 (max150)	100 (max150)	100 (max150)	100 (max150)
Sound power level (H/M/L)		dB	62/61/60	70/68/66	71/69/67	73/71/69
Sound pressure level (H/M/L)		dB(A)	45/44/43	48/46/44	49/47/45	51/49/47
Dimensions	H x W x D	mm	360 x 1,100(+100) x 700	360 x 1,100(+100) x 700	430 x 1,100(+100)x 700	430 x 1,100(+100) x 700
Pipe connections	Liquid	mm (inches)	Ø9.52 (Ø3/8)	Ø9.52 (Ø3/8)	Ø9.52 (Ø3/8)	Ø9.52 (Ø3/8)
	Gas	mm (inches)	Ø15.88 (Ø5/8)	Ø15.88 (Ø5/8)	Ø15.88 (Ø5/8)	Ø15.88 (Ø5/8)
	Drain piping		VP-25	VP-25	VP-25	VP-25
Net weight		kg	42	44	48	53

GLOBAL REMARKS	Rated conditions:	Cooling	Heating
	Indoor air temperature	27°C DB / 19°C WB	20°C DB
	Outdoor air temperature	35°C DB / 24°C WB	7°C DB / 6°C WB

Specifications are subject to be changed without notice.

E1 TYPE HIGH STATIC DUCTED Dimensions

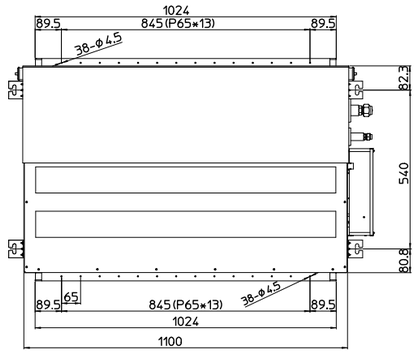

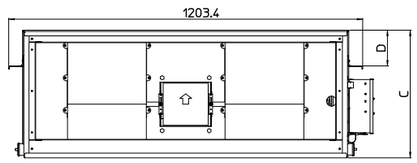

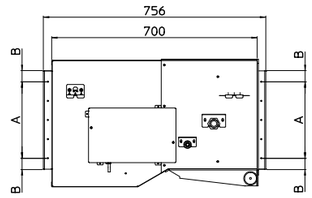

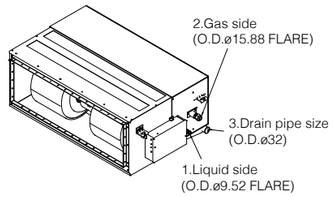

Dimensions: mm

model	A	B	C	D
S-90ME1R5A S-112ME1R5A	195	35.7	360	50
S-140ME1R5A S-160ME1R5A	260	38.2	430	121.5

Model Name			S-22MK2E5A	S-28MK2E5A	S-36MK2E5A	S-45MK2E5A
Power source			220/230/240 V, 1 phase - 50 / 60 Hz			
Cooling capacity		kW	2.2	2.8	3.6	4.5
		BTU/h	7,500	9,600	12,300	15,400
Heating capacity		kW	2.50	3.20	4.20	5.0
		BTU/h	8,500	10,900	14,300	17,100
Power input	Cooling	kW	0.025/0.025/0.025	0.025/0.025/0.025	0.030/0.030/0.030	0.030/0.030/0.030
	Heating	kW	0.025/0.025/0.025	0.025/0.025/0.025	0.030/0.030/0.030	0.030/0.030/0.030
Running current	Cooling	A	0.21	0.23	0.25	0.33/0.32/0.31
	Heating	A	0.21	0.23	0.25	0.33/0.32/0.31
Fan	Type		Cross-flow fan	Cross-flow fan	Cross-flow fan	Cross-flow fan
	Air flow rate (H/M/L)	m^3/h	540/450/390	570/498/390	654/540/390	870/750/600
		L/s	153/138/113	161/142/113	187/158/113	242/208/167
	Motor output	kW	0.03	0.03	0.03	0.054
Sound power level (H/M/L)		dB	51/48/44	52/49/44	55/51/44	53/50/48
Sound pressure level (H/M/L)		dB(A)	36/33/29	37/34/29	40/36/29	38/35/33
Dimensions	H x W x D	mm	290 x 870 x 214	290 x 870 x 214	290 x 870 x 214	302 x 1,120 x 236
Pipe connections	Liquid	mm (inches)	Ø6.35 (Ø1/4)	Ø6.35 (Ø1/4)	Ø6.35 (Ø1/4)	Ø6.35 (Ø1/4)
	Gas	mm (inches)	Ø12.7 (Ø1/2)	Ø12.7 (Ø1/2)	Ø12.7 (Ø1/2)	Ø12.7 (Ø1/2)
	Drain piping	mm	Ø18	Ø18	Ø18	Ø18
Net weight		kg	9	9	9	13

GLOBAL REMARKS	Rated conditions:	Cooling	Heating
	Indoor air temperature	27℃ DB / 19℃ WB	20℃ DB
	Outdoor air temperature	35℃ DB / 24℃ WB	7℃ DB / 6℃ WB

Specifications are subject to change without notice.

K2 (22-36) TYPE WALL MOUNTED Dimensions

S-22MK2E5A / S-28MK2E5A / S-36MK2E5A

1 Refrigerant piping (liquid pipe) ø6.35(flared)
2 Refrigerant piping (gas pipe) ø12.7(flared)
3 Drain hose (outer dia. ø16)
4 Rear panel (PL BACK)
5 Rear panel fixing holes (ø5 holes or 5X13 oval holes)
6 Tubing and wiring holes (ø70)

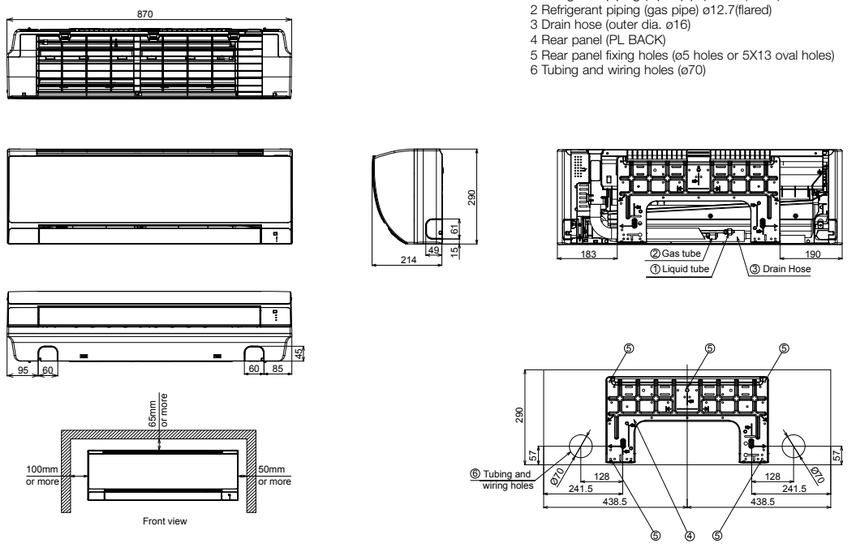

unit: mm

S-56MK2E5A	S-73MK2E5A	S-106MK2E5A
220/230/240 V, 1 phase - 50 / 60 Hz		
5.6	7.3	10.6
19,100	24,900	36,200
6.3	8.0	11.4
21,500	27,300	38,900
0.035/0.035/0.035	0.055/0.055/0.055	0.080/0.080/0.080
0.035/0.035/0.035	0.055/0.055/0.055	0.080/0.080/0.080
0.36/0.35/0.34	0.52/0.51/0.50	0.72/0.70/0.68
0.36/0.35/0.34	0.52/0.51/0.50	0.72/0.70/0.68
Cross-flow fan	Cross-flow fan	Cross-flow fan
960/840/720	1,170/1,020/840	1,290/1,110/900
267/233/200	325/283/233	358/308/250
0.054	0.054	0.054
55/52/50	62/59/55	64/61/57
40/37/35	47/44/40	49/46/42
302 x 1,120 x 236	302 x 1,120 x 236	302 x 1,120 x 236
Ø6.35 (Ø1/4)	Ø9.52 (Ø3/8)	Ø9.52 (Ø3/8)
Ø12.7 (Ø1/2)	Ø15.88 (Ø5/8)	Ø15.88 (Ø5/8)
Ø18	Ø18	Ø18
13	14	14

K2 (45-106) TYPE WALL MOUNTED Dimensions

S-45MK2E5A / S-56MK2E5A / S-73MK2E5A / S-106MK2E5A

1 Refrigerant piping (liquid pipe) 45-56 / 73-106 type ø6.35 / ø9.52 (flared)
2 Refrigerant piping (gas pipe) 45-56 / 73-106 type ø12.7 / ø15.88 (flared)
3 Drain hose VP13 (outer dia. ø18)
4 Rear panel (PL BACK)
5 Tubing and wiring holes (ø80)

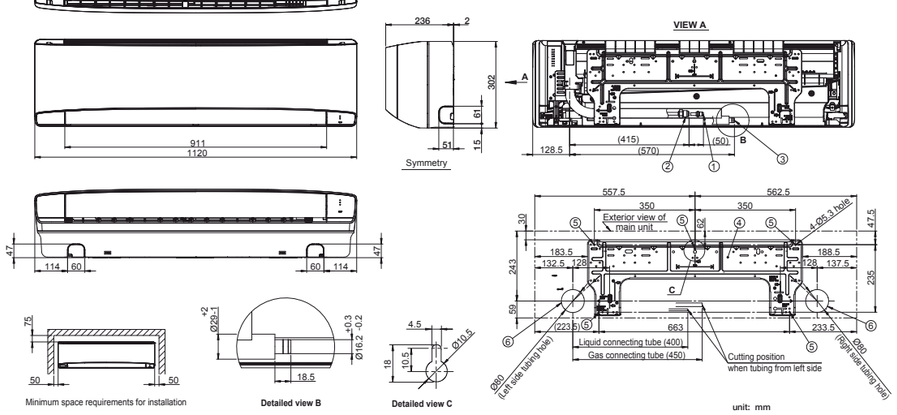

unit: mm

Model Name			S-22MU2E5A	S-28MU2E5A	S-36MU2E5A	S-45MU2E5A	S-56MU2E5A
Power source			220/230/240 V, 1 phase - 50Hz/60Hz				
Cooling capacity		kW	2.2	2.8	3.6	4.5	5.6
		BTU/h	7,500	9,600	12,300	15,400	19,100
Heating capacity		kW	2.5	3.2	4.2	5.0	6.3
		BTU/h	8,500	10,900	14,300	17,100	21,500
Power input	Cooling	kW	0.020/0.020/0.020	0.020/0.020/0.020	0.020/0.020/0.020	0.020/0.020/0.020	0.025/0.025/0.025
	Heating	kW	0.020/0.020/0.020	0.020/0.020/0.020	0.020/0.020/0.020	0.020/0.020/0.020	0.025/0.025/0.025
Running current	Cooling	A	0.21/0.21/0.20	0.21/0.21/0.20	0.21/0.21/0.20	0.21/0.21/0.20	0.24/0.23/0.22
	Heating	A	0.20/0.20/0.19	0.20/0.20/0.19	0.20/0.20/0.19	0.20/0.20/0.19	0.23/0.22/0.21
Fan	Type		Turbo fan	Turbo fan	Turbo fan	Turbo fan	Turbo fan
	Air flow rate (H/M/L)	m^3/h	870/780/690	870/780/690	870/780/690	930/780/690	990/810/690
		L/s	233/200/183	233/200/183	233/200/183	250/217/200	275/225/192
	Motor output	kW	0.06	0.06	0.06	0.06	0.06
Sound power level (H/M/L)		dB	45/44/43	45/44/43	45/44/43	46/44/43	47/45/43
Sound pressure level (H/M/L)		dB(A)	30/29/28	30/29/28	30/29/28	31/29/28	32/30/28
Dimensions*	H x W x D	mm	256+(33.5) x 840 (950) x 840 (950)				
Pipe connections	Liquid	mm (inches)	Ø6.35 (Ø1/4)	Ø6.35 (Ø1/4)	Ø6.35 (Ø1/4)	Ø6.35 (Ø1/4)	Ø6.35 (Ø1/4)
	Gas	mm (inches)	Ø12.7 (Ø1/2)	Ø12.7 (Ø1/2)	Ø12.7 (Ø1/2)	Ø12.7 (Ø1/2)	Ø12.7 (Ø1/2)
	Drain piping		VP-25	VP-25	VP-25	VP-25	VP-25
Net weight (Panel)		kg	19 (+5)	19 (+5)	19 (+5)	19 (+5)	19 (+5)

GLOBAL REMARKS	Rated conditions:	Cooling	Heating
	Indoor air temperature	27°C DB / 19°C WB	20°C DB
	Outdoor air temperature	35°C DB / 24°C WB	7°C DB / 6°C WB

Specifications are subject to change without notice.

* The values in ( ) for external dimensions and Net weight are the values for the optional ceiling panel.

nanoe™X

Test report for odours and mould suppression performance

No.	Target Substance	Effectiveness	Testing Institute	Test Report No.	Method	Result
1	**Odours**	**Decrease by 0.7 level**	Gunma Research Center	Test Report No. 27055	nanoe™X was operated in a test space (55m²) and the deodorisation effect on a piece of cloth impregnated with odour components of cigarette smoke was evaluated using 6 level odour intensity indication method.	**Decrease in odour intensity by 0.7 level after 2 hour of operation**
2	**Mould**	**Inhibit mould growth**	Institute of Environmental Biology	Test Report No.150901, 150904	Mould sensor was attached at indoor unit inside. In a test space (95m³) at 25 degree and 75% humidity, AC cooling with nanoe™X was operated during 2 hour per day for 9 days.	**No mould growth after 9 days.**

S-60MU2E5A	S-73MU2E5A	S-90MU2E5A	S-106MU2E5A	S-140MU2E5A	S-160MU2E5A
			220/230/240 V, 1 phase - 50Hz/60Hz		
6.0	7.3	9.0	10.6	14.0	16.0
20,500	24,900	30,700	36,200	47,800	54,600
7.1	8.0	10.0	11.4	16.0	18.0
24,200	27,300	34,100	38,900	54,600	61,400
0.035/0.035/0.035	0.040/0.040/0.040	0.040/0.040/0.040	0.090/0.090/0.090	0.095/0.095/0.095	0.105/0.105/0.105
0.035/0.035/0.035	0.040/0.040/0.040	0.040/0.040/0.040	0.085/0.085/0.085	0.090/0.090/0.090	0.100/0.100/0.100
0.34/0.33/0.32	0.37/0.36/0.35	0.39/0.38/0.37	0.74/0.71/0.68	0.77/0.74/0.71	0.85/0.82/0.79
0.33/0.32/0.31	0.36/0.35/0.34	0.38/0.37/0.36	0.72/0.69/0.66	0.75/0.72/0.69	0.83/0.80/0.77
Turbo fan	Turbo fan	Turbo fan	Turbo fan	Turbo fan	Turbo fan
1,260/960/780	1,350/960/780	1,380/1,110/840	2,040/1,500/1,140	2,160/1,560/1,200	2,220/1,680/1,440
350/283/233	367/283/233	383/317/250	550/450/350	600/433/333	600/483/383
0.06	0.06	0.06	0.09	0.09	0.09
51/47/44	52/47/44	53/50/47	59/53/49	60/54/50	61/55/53
36/32/29	37/32/29	38/35/32	44/38/34	45/39/35	46/40/38
			319+(33.5) x 840 (950) x 840 (950)		
Ø9.52 (Ø3/8)	Ø9.52 (Ø3/8)	Ø9.52 (Ø3/8)	Ø9.52 (Ø3/8)	Ø9.52 (Ø3/8)	Ø9.52 (Ø3/8)
Ø15.88 (Ø5/8)	Ø15.88 (Ø5/8)	Ø15.88 (Ø5/8)	Ø15.88 (Ø5/8)	Ø15.88 (Ø5/8)	Ø15.88 (Ø5/8)
VP-25	VP-25	VP-25	VP-25	VP-25	VP-25
20 (+5)	20 (+5)	20 (+5)	25 (+5)	25 (+5)	25 (+5)

U2 TYPE 4-WAY CASSETTE Dimensions

1 Air intake
2 Discharge outlet
3 Refrigerant piping (liquid pipe) 22-56 type ø6.35 (flared), 60-90 type ø9.52 (flared)
4 Refrigerant piping (gas pipe) 22-56 type ø12.7 (flared), 60-90 type ø15.88 (flared)
5 Drain tube connection port VP25 (outer dia. ø32)
6 Power supply port
7 Discharge duct connection port (ø150)
8 Suspension bolt hole (4-12×30 elongated hole)
9 Fresh air intake duct connection port (ø100) *
10 ECONAVI sensor (Only CZ-KPU3A)

*1: Necessary to attach duct connecting flange (field supplied).
Filter size: 520 x 520 x 15

	22~90 type	106~160 type
A	256	319
B	124	187

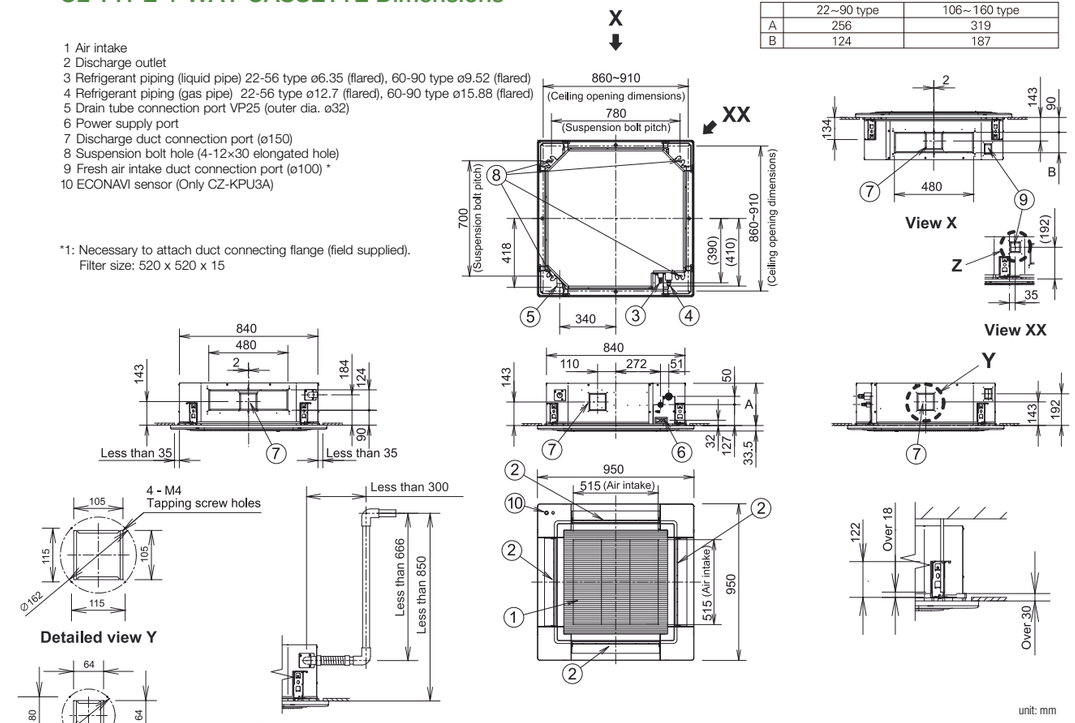

The length of the suspension bolts should be selected so that there is a gap of 30mm or more below the lower surface of the ceiling (1mm or more below the lower surface of the main unit), as shown in the figure at right. If the suspension bolt is too long, it will contact the ceiling panel and the unit cannot be installed.

Y2 TYPE 4-WAY Mini Cassette

Mini semi concealed cassette

Designed to fit perfectly into a 600 x 600mm ceiling grid without the need to alter the bar configuration, the Mini Cassette Y2 Type is ideal for small commercial and retrofit applications.

PANEL

8 x 1060 x 680mm (HxWxD)

CZ-KPY3AW

8 x 1360 x 680mm (HxWxD)

ECONAVI

ECONAVI ready

CZ-CENSC1

CZ-RTC5B

CZ-RWSK2

Self-diagnosing Function | Automatic Fan Operation | Mild dry | Intelligent Auto Swing | Automatic Restart Function | Auto Swing (Auto Flap Control) | Built-in Drain Pump

Technical focus

- Mini cassette fits into a 600 x 600mm ceiling grid
- Anti-mould and anti-bacteria washable filters
- Powerful drain pump gives 750mm lift
- DC fan motor with variable speed and a new heat exchanger ensures efficient power consumption
- Fresh air knock out
- Multi directional air flow

Compact design

The panel is a compact (700 × 700mm) so it can be installed even in a small room where space is limited.

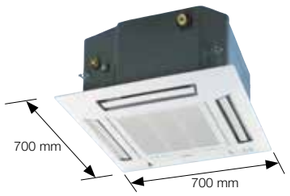

Lighter and slimmer, easier installation

When only 260mm of indoor body height, it can easily fit in limited spaces and tight spots.
(Required 288mm from bottom of panel to top of the unit)

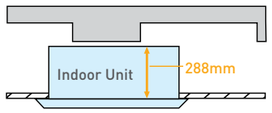

A drain height of up to 750 mm from the ceiling surface

The internal pump allows the drain pipe to be elevated up to 750mm above the base of the unit.

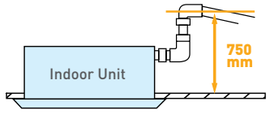

Anti-Mould Long-Life Air Filter

Anti-mould and anti-bacteria washable filter ensures clean, healthy air.

Model Name			S-22MY2E5A	S-28MY2E5A	S-36MY2E5A	S-45MY2E5A	S-56MY2E5A
Power source			220/230/240 V, 1 phase - 50, 60 Hz				
Cooling capacity		kW	2.2	2.8	3.6	4.5	5.6
		BTU/h	7,500	9,600	12,300	15,400	19,100
Heating capacity		kW	2.5	3.2	4.2	5.0	6.3
		BTU/h	8,500	10,900	14,300	17,100	21,500
Power input	Cooling	kW	0.035	0.035	0.040	0.040	0.045
	Heating	kW	0.030	0.030	0.035	0.035	0.040
Running amperes	Cooling	A	0.30	0.30	0.30	0.32	0.35
	Heating	A	0.25	0.30	0.30	0.30	0.35
Fan motor	Type		Turbo fan	Turbo fan	Turbo fan	Turbo fan	Turbo fan
	Airflow rate (H/M/L)	m^3/h	546/492/336	558/504/336	582/522/360	600/558/492	624/588/510
		L/s	155/140/93	160/140/93	165/151/100	172/160/137	185/163/145
	Output	kW	0.04	0.04	0.04	0.04	0.04
Power sound level (H/M/L)	Cooling	dB	50/46/40	50/46/40	5 /47/41	53/49/43	55/52/49
	Heating	dB	50/46/40	50/46/40	51/47/41	53/49/43	55/52/49
Sound pressure level (H/M/L)	Cooling	dB(A)	35/31/25	35/31/25	36/32/26	38/34/28	40/37/34
	Heating	dB(A)	35/31/25	35/31/25	36/32/26	38/34/28	40/37/34
Dimensions*	H x W x D	mm	288 (+31) x 575 (700) x 575 (700)	288 (+31) x 575 (700) x 575 (700)	288 (+31) x 575 (700) x 575 (700)	288 (+31) x 575 (700) x 575 (700)	288 (+31) x 575 (700) x 575 (700)
Pipe connections	Liquid	mm (inches)	Ø6.35 (Ø1/4)	Ø6.35 (Ø1/4)	Ø6.35 (Ø1/4)	Ø6.35 (Ø1/4)	Ø6.35 (Ø1/4)
	Gas	mm (inches)	Ø12.7 (Ø1/2)	Ø12.7 (Ø1/2)	Ø12.7 (Ø1/2)	Ø12.7 (Ø1/2)	Ø12.7 (Ø1/2)
	Drain piping		VP-25	VP-25	VP-25	VP-25	VP-25
Net weight*		kg	18 (+2.4)	18 (+2.4)	18 (+2.4)	18 (+2.4)	18 (+2.4)

GLOBAL REMARKS	Rated conditions:	Cooling	Heating
	Indoor air temperature	27°C DB / 19°C WB	20°C DB
	Outdoor air temperature	35°C DB / 24°C WB	7°C DB / 6°C WB

*The values in ( ) for external dimensions and Net weight are the values for the optional ceiling panel.
Specifications are subject to change without notice.

Y2 TYPE 4-WAY CASSETTE Dimensions

1 Air intake grill
2 Air outlet
3 Refrigerant piping (liquid pipe) ø6.35 (flared)
4 Refrigerant piping (gas pipe) ø12.7 (flared)
5 Drain tube connection port VP25 (outer ø32)
6 Power supply entry
7 Suspension bolt hole (4-11 x 26 slot)
8 Fresh air intake duct connection port (ø80)

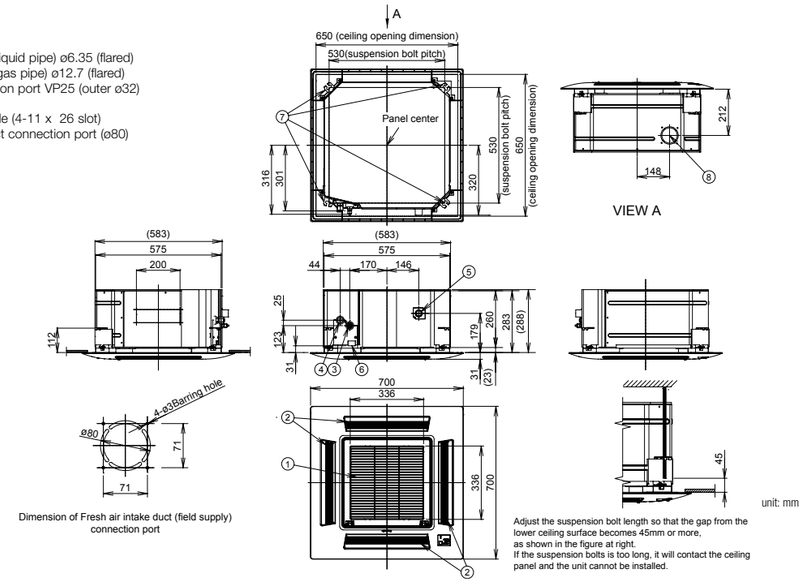

L1 TYPE 2-WAY Cassette

Semi Concealed Cassette

The L1 is very thin, compact and light, allowing flexible installation options.
A redesigned fan has been used to achieve this size and weight reduction.

PANEL

CZ-02KPL2
8 x 1060 x 680mm (HxWxD)

Big size panel (for S-73ML1E5)
CZ-03KPL2
8 x 1360 x 680mm (HxWxD)

CZ-RTC5B

CZ-RWSL2N

Self-diagnosing Function | Automatic Fan Operation | Mild dry | Intelligent Auto Swing | Automatic Restart Function | Auto Swing (Auto Flap Control) | Built-in Drain Pump

Technical focus

- Airflow and distribution is automatically altered depending on the operational mode of the unit
- Drain up is possible up to 500mm via the built-in drain pump
- Simple maintenance

Auto flap control

Airflow and distribution is automatically altered depending on the operational mode (cooling or heating) of the unit.

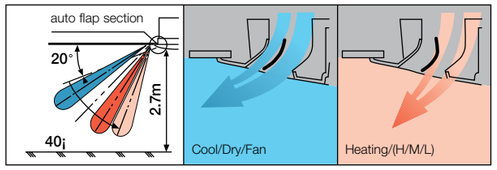

Drain up is possible up to 500mm via the built-in drain pump.

Maintenance of the drain pump is possible from both sides, from the left side (piping side) and from the inside of the unit.

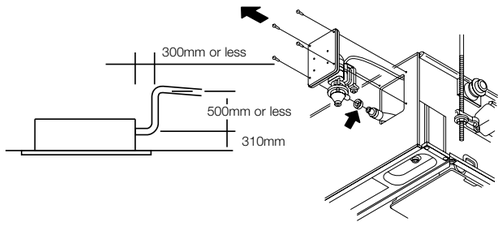

Simple maintenance

The drain pan is equipped with site wiring and can be removed. The fan case has a split construction, and the fan motor can be removed easily when the lower case is removed.

Model Name			S-22ML1E5	S-28ML1E5	S-36ML1E5	S-45ML1E5	S-56ML1E5	S-73ML1E5
Power source			220/230/240V, 1 phase - 50 / 60Hz					
Cooling capacity		kW	2.2	2.8	3.6	4.5	5.6	7.3
		BTU/h	7,500	9,600	12,000	15,000	19,000	25,000
Heating capacity		kW	2.5	3.2	4.2	5.0	6.3	8.0
		BTU/h	8,500	11,000	14,000	17,000	21,000	27,000
Power input	Cooling	kW	0.086/0.090/0.095	0.086/0.092/0.097	0.088/0.093/0.099	0.091/0.097/0.103	0.091/0.097/0.103	0.135/0.145/0.154
	Heating	kW	0.055/0.058/0.062	0.055/0.060/0.064	0.057/0.061/0.066	0.060/0.065/0.070	0.060/0.065/0.070	0.100/0.109/0.117
Running current	Cooling	A	0.45/0.45/0.45	0.44/0.45/0.45	0.44/0.45/0.45	0.45/0.45/0.45	0.45/0.45/0.45	0.64/0.65/0.66
	Heating	A	0.29/0.29/0.30	0.28/0.29/0.30	0.28/0.29/0.30	0.29/0.29/0.30	0.29/0.29/0.30	0.46/0.48/0.49
Fan	Type		Sirocco fan	Sirocco fan	Sirocco fan	Sirocco fan	Sirocco fan	Sirocco fan
	Air flow rate (H/M/L)	m³/h	480/420/360	540/480/420	580/520/460	660/540/480	660/540/480	1,140/960/840
		L/s	133/117/100	150/133/117	161/144/128	183/150/133	183/150/133	317/267/233
	Motor output	kW	0.03	0.03	0.03	0.03	0.03	0.05
Sound power level (H/M/L)		dB	40/38/35	44/40/37	45/42/39	46/44/40	46/44/40	49/46/44
Sound pressure level (H/M/L)		dB(A)	30/27/24	33/29/26	34/31/28	35/33/29	35/33/29	38/35/33
Dimensions*	H x W x D	mm	350+(8)x840 (1,060) x600 (680)	350+(8)x840 (1,060) x600 (680)	350+(8)x840 (1,060) x600 (680)	350+(8)x840 (1,060) x600 (680)	350+(8)x840 (1,060) x600 (680)	350+(8)x 1,140 (1,360) x600 (680)
Pipe connections	Liquid	mm (inches)	Ø6.35 (Ø1/4)	Ø6.35 (Ø1/4)	Ø6.35 (Ø1/4)	Ø6.35 (Ø1/4)	Ø6.35 (Ø1/4)	Ø9.52 (Ø3/8)
	Gas	mm (inches)	Ø12.7 (Ø1/2)	Ø12.7 (Ø1/2)	Ø12.7 (Ø1/2)	Ø12.7 (Ø1/2)	Ø12.7 (Ø1/2)	Ø15.88 (Ø5/8)
	Drain piping		VP-25	VP-25	VP-25	VP-25	VP-25	VP-25
Net weight*		kg	23 (+5.5)	23 (+5.5)	23 (+5.5)	23 (+5.5)	23 (+5.5)	30 (+9)

GLOBAL REMARKS	Rated conditions:	Cooling	Heating
	Indoor air temperature	27°C DB / 19°C WB	20°C DB
	Outdoor air temperature	35°C DB / 24°C WB	7°C DB / 6°C WB

*The values in ( ) for external dimensions and Net weight are the values for the optional ceiling panel.
Specifications are subject to change without notice.

L1 TYPE 2-WAY CASSETTE Dimensions

1 Air intake
2 Air outlet
3 Ceiling opening dimensions
4 Suspension fitting (notch: 12mm)
5 Refrigerant piping (liquid pipes)
6 Refrigerant piping (gas pipes)
7 Drain connection VP25 (outer diameter ø 32)
8 Inlet for option cord between power supply and unit
9 Drain pan, drain pump inspection lid
10 Drain pump inspection lid
11 Round flange (field supply) mounting part (fresh air inlet ø 125)
12 Discharge duct (field supply) mounting part (installation possible only on the right side)
13 Wireless remote controller (option) signal receiver installation part

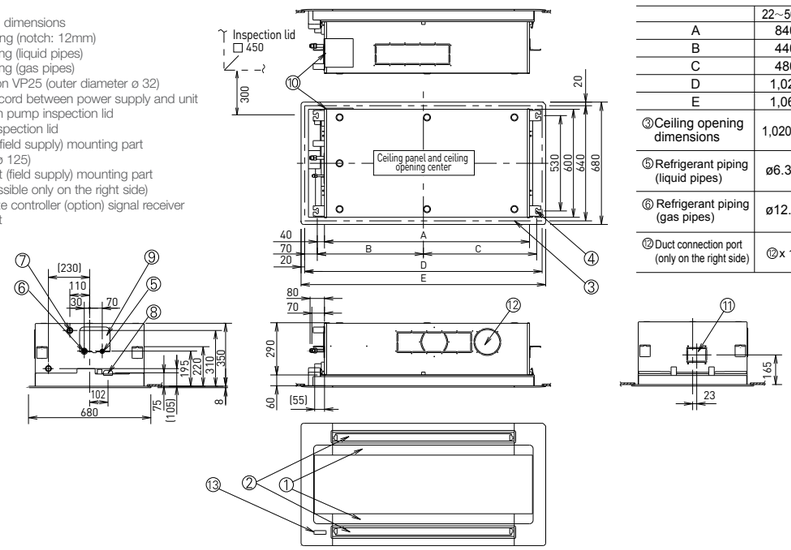

	22~56 type	73 type
A	840	1,140
B	440	590
C	480	630
D	1,020	1,320
E	1,060	1,360
③Ceiling opening dimensions	1,020x640	1,320x640
⑤Refrigerant piping (liquid pipes)	ø6.35	ø9.52
⑥Refrigerant piping (gas pipes)	ø12.7	ø15.88
⑫Duct connection port (only on the right side)	⑫x 1 pc.	⑫x 2 pc.

unit: mm

INDOOR UNITS / D1 TYPE

D1 TYPE 1-WAY Cassette

Semi concealed slim cassette

Designed for installation within the ceiling void, the D1 range of slimline 1-PIPE cassettes feature a quiet yet powerful fan that can reach the floor up 4.2m from ceiling height.

Self-diagnosing Function | Automatic Fan Operation | Mild dry | Intelligent Auto Swing | Automatic Restart Function | Auto Swing (Auto Flap Control) | Built-in Drain Pump

Technical focus

- Ultra-Slim profile
- Suitable for standard and high ceilings
- Built-in drain pump provides 590mm lift from ceiling
- Easy to install and maintain
- Hanging height can be easily adjusted
- Uses a DC fan motor to improve energy-efficiency

Drain height

A built-in drain pump provides up to 590mm lift from ceiling height for flexible install options.

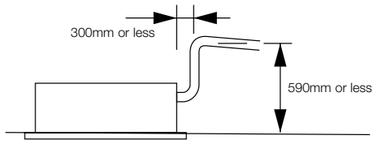

With 3 types of air-blow systems, the units can be used in various ways.

(1) One-direction "down-blow" system

Powerful one-direction "down-blow" system reaches the floor even from high ceilings (up to 4.2m).

(2) Two-direction ceiling-mounted system

"Down-blow" and "front-blow" systems are combined in a ceiling-mounted unit to blow air over a wide area.

(3) One-direction ceiling-mounted system

This powerful ceiling-mounted "front-blow" system efficiently air-conditions the space in front of the unit.
(Additional accessories required)

Model Name			S-28MD1E5	S-36MD1E5	S-45MD1E5	S-56MD1E5	S-73MD1E5
Power source			220/230/240 V, 1 phase - 50 / 60 Hz				
Cooling capacity		kW	2.8	3.6	4.5	5.6	7.3
		BTU/h	9,600	12,000	15,000	19,000	25,000
Heating capacity		kW	3.2	4.2	5.0	6.3	8.0
		BTU/h	11,000	14,000	17,000	21,000	27,000
Power input	Cooling	kW	0.050/0.051/0.052	0.050/0.051/0.052	0.050/0.051/0.052	0.058/0.060/0.061	0.086/0.087/0.089
	Heating	kW	0.039/0.040/0.042	0.039/0.040/0.042	0.039/0.040/0.042	0.046/0.048/0.049	0.075/0.076/0.077
Running current	Cooling	A	0.40/0.39/0.39	0.40/0.39/0.39	0.40/0.39/0.39	0.46/0.46/0.46	0.71/0.70/0.69
	Heating	A	0.36/0.35/0.35	0.36/0.35/0.35	0.36/0.35/0.35	0.42/0.41/0.41	0.66/0.65/0.63
Fan	Type		Sirocco fan	Sirocco fan	Sirocco fan	Sirocco fan	Sirocco fan
	Air flow rate (H/M/L)	m³/h	720/600/540	720/600/540	720/660/600	780/690/600	1,080/900/780
		L/s	200/167/150	200/167/150	200/183/167	217/192/167	300/250/217
	Motor output	kW	0.05	0.05	0.05	0.05	0.05
Sound power level (H/M/L)		dB	47/45/44	47/45/44	47/46/45	49/47/45	56/51/47
Sound pressure level (H/M/L)		dB(A)	36/34/33	36/34/33	36/35/34	38/36/34	45/40/36
Dimensions*	H x W x D	mm	200+(20) x 1,000 (1,230) x 710 (800)	200+(20) x 1,000 (1,230) x 710 (800)	200+(20) x 1,000 (1,230) x 710 (800)	200+(20) x 1,000 (1,230) x 710 (800)	200+(20) x 1,000 (1,230) x 710 (800)
Pipe connections	Liquid	mm (inches)	Ø6.35 (Ø1/4)	Ø6.35 (Ø1/4)	Ø6.35 (Ø1/4)	Ø6.35 (Ø1/4)	Ø9.52 (Ø3/8)
	Gas	mm (inches)	Ø12.7 (Ø1/2)	Ø12.7 (Ø1/2)	Ø12.7 (Ø1/2)	Ø12.7 (Ø1/2)	Ø15.88 (Ø5/8)
	Drain piping		VP-25	VP-25	VP-25	VP-25	VP-25
Net weight*		kg	21 (+5.5)	21 (+5.5)	21 (+5.5)	21 (+5.5)	22 (+5.5)

GLOBAL REMARKS	Rated conditions:	Cooling	Heating
	Indoor air temperature	27°C DB / 19°C WB	20°C DB
	Outdoor air temperature	35°C DB / 24°C WB	7°C DB / 6°C WB

*The values in ( ) for external dimensions and Net weight are the values for the optional ceiling panel.
Specifications are subject to change without notice.

D1 TYPE 1-PIPE CASSETTE Dimensions

1 Air intake grille
2 Air outlet
3 Refrigerant piping (liquid pipes)
  Size 28 to 56: Ø6.35 (flared)
  Size 73: Ø9.52 (flared)
4 Refrigerant piping (gas pipes)
  Size 28 to 56: Ø12.7 (flared)
  Size 73: Ø15.88 (flared)
5 Drain connection VP25 (outer Ø32)
6 Power supply entry
7 Discharge duct connection port (for descending ceiling)
8 Wireless remote control receiver (option)
9 Suspension mounting (4-12 x 30 slot)
10 Fresh air intake (Ø100)

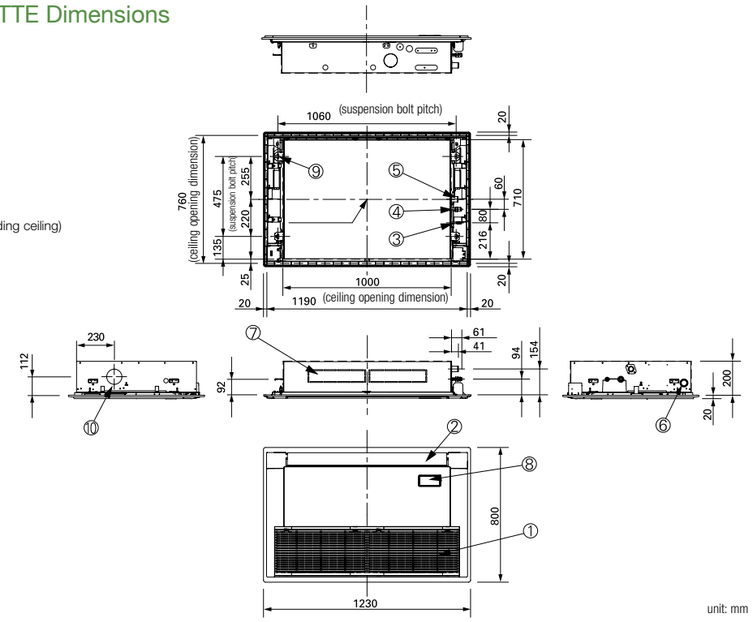

INDOOR UNITS / T2 TYPE

T2 TYPE Ceiling

DC motor

Ceiling mounted

Providing outstanding energy-saving performance and comfortable, long-distance air flow distribution, it's recommended for stores and schools.

ECONAVI
ECONAVI ready

Technical focus

- Lower sound levels
- Standardised height and depth for all models
- Long and wide air distribution
- Easy to install and maintain
- Fresh air knockout

Compact Looking, Stylish, One-Motion Design

With its streamlined, one-motion form, the unit looks slim and compact when installed for a neat appearance in any room. When not operating, the louvre closes to provide an elegant look while keeping the unit clean.

Energy-Saving Technology Delivering Top-Class Efficiency

Optimisation of the shape of the casing and fan assures greater air flow and higher efficiency. Energy-saving performance is top class in the industry.

Top Class Energy Saving

Large Diagonal Air Flow Fan

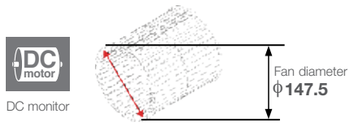

Comfortable, Long-Distance Air Flow Distribution

The shape of the outlet has been optimised to provide long-distance air flow distribution. Even in deep spaces, air flow reaches every corner for exceptionally comfortable air conditioning.

High Ceiling Setting *Setting by remote control	Air flow distance		
	112	140	160
4.3m	12m	13m	13m

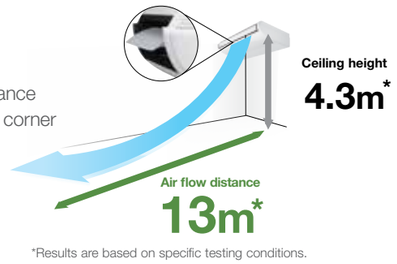

*Results are based on specific testing conditions.

Multiple Piping Directions For Flexible Installation

The 5-directional drain pipe and 3-directional refrigerant pipe make installation much easier. And the neat fit with walls and ceilings assures more installation flexibility.

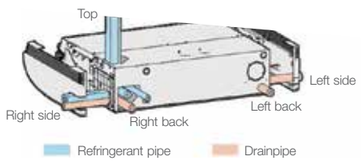

Model Name			S-36MT2E5A	S-45MT2E5A	S-56MT2E5A	S-73MT2E5A	S-106MT2E5A	S-140MT2E5A
Power source			220 / 230 / 240 V, 1 phase - 50 / 60 Hz					
Cooling capacity		kW	3.6	4.5	5.6	7.3	10.6	14.0
		BTU/h	12,300	15,400	19,100	24,900	36,200	47,800
Heating capacity		kW	4.2	5.0	6.3	8.0	11.4	16.0
		BTU/h	14,300	17,100	21,500	27,300	38,900	54,600
Power input	Cooling	kW	0.035/0.035/0.035	0.040/0.040/0.040	0.040/0.040/0.040	0.055/0.055/0.055	0.080/0.080/0.080	0.100/0.100/0.100
	Heating	kW	0.035/0.035/0.035	0.040/0.040/0.040	0.040/0.040/0.040	0.055/0.055/0.055	0.080/0.080/0.080	0.100/0.100/0.100
Running current	Cooling	A	0.37/0.36/0.35	0.39/0.38/0.37	0.39/0.38/0.37	0.45/0.44/0.43	0.69/0.67/0.65	0.82/0.79/0.77
	Heating	A	0.37/0.36/0.35	0.39/0.38/0.37	0.39/0.38/0.37	0.45/0.44/0.43	0.69/0.67/0.65	0.82/0.79/0.77
Fan	Type		Sirocco fan	Sirocco fan	Sirocco fan	Sirocco fan	Sirocco fan	Sirocco fan
	Air flow rate (H/M/L)	m³/h	840/720/630	900/750/630	900/750/630	1,260/1,080/930	1,800/1,500/1,380	1,920/1,680/1,440
		L/s	233/200/175	250/208/175	250/208/175	350/300/258	500/417/383	533/467/400
	Motor output	kW	0.043	0.043	0.043	0.074	0.111	0.111
Sound power level (H/M/L)		dB	54/50/48	55/51/48	55/51/48	57/53/51	60/55/54	62/58/55
Sound pressure level (H/M/L)		dB(A)	36/32/30	37/33/30	37/33/30	39/35/33	42/37/36	44/40/37
Dimensions	H x W x D	mm	235 x 960 x 690	235 x 960 x 690	235 x 960 x 690	235 x 1,275 x 690	235 x 1,590 x 690	235 x 1,590 x 690
Pipe connections	Liquid	mm (inches)	Ø6.35 (Ø1/4)	Ø6.35 (Ø1/4)	Ø6.35 (Ø1/4)	Ø9.52 (Ø3/8)	Ø9.52 (Ø3/8)	Ø9.52 (Ø3/8)
	Gas	mm (inches)	Ø12.7 (Ø1/2)	Ø12.7 (Ø1/2)	Ø12.7 (Ø1/2)	Ø15.88 (Ø5/8)	Ø15.88 (Ø5/8)	Ø15.88 (Ø5/8)
	Drain piping		VP-20	VP-20	VP-20	VP-20	VP-20	VP-20
Net weight		kg	27	27	27	33	40	40

GLOBAL REMARKS	Rated conditions:	Cooling	Heating
	Indoor air temperature	27°C DB / 19°C WB	20°C DB
	Outdoor air temperature	35°C DB / 24°C WB	7°C DB / 6°C WB

Specifications are subject to change without notice.

T2 PIPE CEILING Dimensions

S-36MT2E5A // S-45MT2E5A // S-56MT2E5A

1	Drain port VP20	Inside diameter ø26mm, drain hose supplied
2	Left drain position	
3	Refrigerant liquid piping	Ø6.35mm for 36~56type, Ø9.52mm for 73~140type
4	Refrigerant gas piping	Ø12.77mm for 36~56type, Ø15.88mm for 73~140type
5	Left side drain hose outlet port (cutout)	
6	Tubing hole on wall surface	Ø100mm
7	Upper side piping port	
8	Right side drain hose outlet port (cutout)	
9	Wireless remote controller receiver installation location	

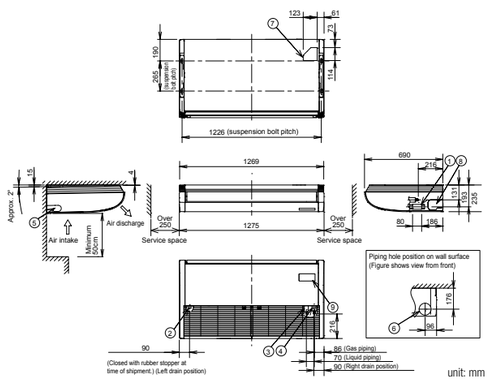

S-73MT2E5A // S-106MT2E5A // S-140MT2E5A

	A	B	C	D	E
104~140 type	1,590	235	690	1,584	1,541
73 type	1,275	235	690	1,269	1,226

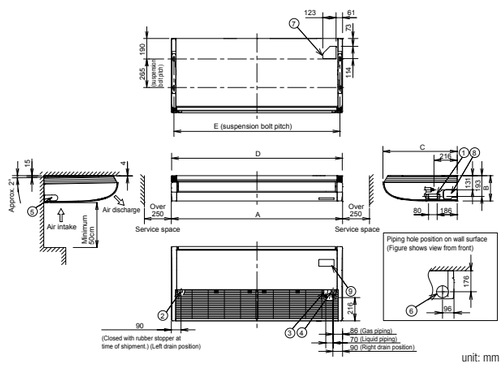

P1 TYPE Floor Standing

The compact floor standing P1 units are the ideal solution for providing perimeter air conditioning.
A standard wired controller can be incorporated into the body of the unit.

CZ-RTC5B

CZ-RWSK2 +
CZ-RWSC3

Self-diagnosing Function | Automatic Fan Operation | Mild dry | Automatic Restart Function

Technical focus

- Pipes can be connected to either side of the unit from the bottom or rear
- Easy to install
- Front panel opens fully for easy maintenance
- Removable air discharge grille gives flexible air flow

Effective perimeter air conditioning

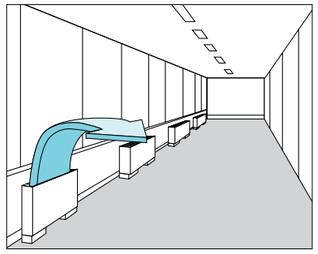

Model Name			S-22MP1E5	S-28MP1E5	S-36MP1E5	S-45MP1E5	S-56MP1E5	S-71MP1E5
Power source			220/230/240 V, 1 phase - 50 / 60 Hz					
Cooling capacity		kW	2.2	2.8	3.6	4.5	5.6	7.1
		BTU/h	7,500	9,600	12,000	15,000	19,000	24,000
Heating capacity		kW	2.5	3.2	4.2	5.0	6.3	8.0
		BTU/h	8,500	11,000	14,000	17,000	21,000	27,000
Power input	Cooling	kW	0.051/0.056/0.061	0.051/0.056/0.061	0.079/0.085/0.091	0.116/0.126/0.136	0.116/0.126/0.136	0.150/0.160/0.170
	Heating	kW	0.036/0.040/0.045	0.036/0.040/0.045	0.064/0.070/0.076	0.079/0.091/0.101	0.079/0.091/0.101	0.110/0.120/0.130
Running current	Cooling	A	0.24/0.25/0.26	0.24/0.25/0.26	0.37/0.38/0.39	0.54/0.56/0.58	0.54/0.56/0.58	0.70/0.72/0.73
	Heating	A	0.17/0.18/0.19	0.17/0.18/0.19	0.30/0.31/0.32	0.37/0.41/0.43	0.37/0.41/0.43	0.52/0.54/0.56
Fan	Type		Sirocco fan	Sirocco fan	Sirocco fan	Sirocco fan	Sirocco fan	Sirocco fan
	Air flow rate (H/M/L)	m³/h	420/360/300	420/360/300	540/420/360	720/540/480	900/780/660	1,020/840/720
		L/s	117/100/83	117/100/83	150/117/100	200/150/133	250/217/183	283/233/200
	Motor output	kW	0.01	0.01	0.02	0.02	0.03	0.06
Sound power level (H/M/L)		dB	44/41/39	44/41/39	50/46/40	49/46/42	50/47/42	52/49/46
Sound pressure level (H/M/L)		dB(A)	33/30/28	33/30/28	39/35/29	38/35/31	39/36/31	41/38/35
Dimensions	H x W x D	mm	615 x 1,065 x 230	615 x 1,065 x 230	615 x 1,065 x 230	615 x 1,380 x 230	615 x 1,380 x 230	615 x 1,380 x 230
Pipe connections	Liquid	mm (inches)	Ø6.35 (Ø1/4)	Ø6.35 (Ø1/4)	Ø6.35 (Ø1/4)	Ø6.35 (Ø1/4)	Ø6.35 (Ø1/4)	Ø9.52 (Ø3/8)
	Gas	mm (inches)	Ø12.7 (Ø1/2)	Ø12.7 (Ø1/2)	Ø12.7 (Ø1/2)	Ø12.7 (Ø1/2)	Ø12.7 (Ø1/2)	Ø15.88 (Ø5/8)
	Drain piping		VP-20	VP-20	VP-20	VP-20	VP-20	VP-20
Net weight		kg	29	29	29	39	39	39

GLOBAL REMARKS	Rated conditions:	Cooling	Heating
	Indoor air temperature	27°C DB / 19°C WB	20°C DB
	Outdoor air temperature	35°C DB / 24°C WB	7°C DB / 6°C WB

Specifications are subject to change without notice.

P1 TYPE FLOOR STANDING
Dimensions

1 4 x Ø12 holes (for floor fixing)
2 Power supply outlet
3 Air filter
4 Refrigerant piping (liquid pipes)
5 Refrigerant piping (gas pipes)
6 Level adjustment bolt
7 Drain outlet VP20 (with vinyl hose)
8 Refrigerant piping connection port (bottom or rear)
9 Operation switch (remote controller RCS-SH80AG) mounting part
10 Electric equipment box
11 Accessory copper pipe for gas pipe connection

Indoor unit	A	B	C	Liquid pipes	Gas pipes
22 to 36 type	1,065	665	632	Ø6.35	Ø12.7
45 type	1,380	980	947		
56 type					
71 type				Ø9.52	Ø15.88

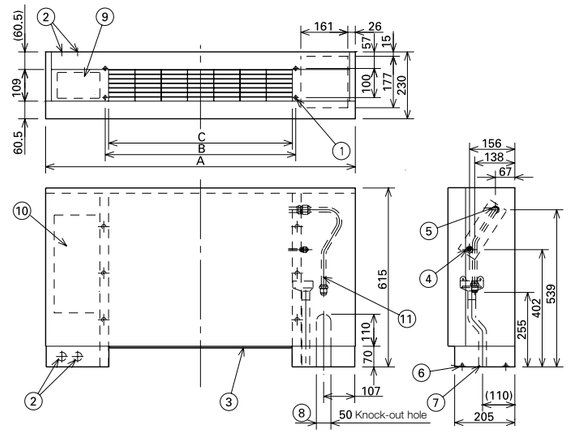

unit: mm

INDOOR UNITS / R1 TYPE

R1 TYPE Concealed Floor Standing

At just 229mm deep, the R1 unit can be easily concealed in perimeter areas to provide powerful and effective air conditioning.

CZ-RTC5B

CZ-RWSK2+
CZ-RWSC3

Self-diagnosing Function

Automatic Fan Operation

Mild dry

Automatic Restart Function

Technical focus

- Chassis unit for discrete customisable installation
- Complete with removable filters
- Pipes can be connected to the unit either from the bottom or rear
- Easy to install

Perimeter air conditioning with high interior quality

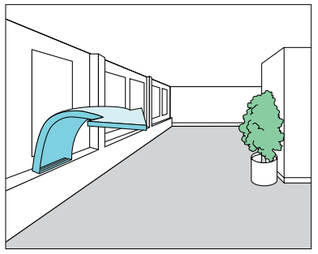

Model Name			S-22MR1E5	S-28MR1E5	S-36MR1E5	S-45MR1E5	S-56MR1E5	S-71MR1E5
Power source			220/230/240 V. 1 phase - 50. 60 Hz					
Cooling capacity		kW	2.2	2.8	3.6	4.5	5.6	7.1
		BTU/h	7,500	9,600	12,000	15,000	19,000	24,000
Heating capacity		kW	2.5	3.2	4.2	5.0	6.3	8.0
		BTU/h	8,500	11,000	14,000	17,000	21,000	27,000
Power input	Cooling	kW	0.051/0.056/0.061	0.051/0.056/0.061	0.079/0.085/0.091	0.116/0.126/0.136	0.116/0.126/0.136	0.150/0.160/0.170
	Heating	kW	0.036/0.040/0.045	0.036/0.040/0.045	0.064/0.070/0.076	0.079/0.091/0.101	0.079/0.091/0.101	0.110/0.120/0.130
Running current	Cooling	A	0.24/0.25/0.26	0.24/0.25/0.26	0.37/0.38/0.39	0.54/0.56/0.58	0.54/0.56/0.58	0.70/0.72/0.73
	Heating	A	0.17/0.18/0.19	0.17/0.18/0.19	0.30/0.31/0.32	0.37/0.41/0.43	0.37/0.41/0.43	0.52/0.54/0.56
Fan	Type		Sirocco fan	Sirocco fan	Sirocco fan	Sirocco fan	Sirocco fan	Sirocco fan
	Air flow rate (H/M/L)	m³/h	420/360/300	420/360/300	540/420/360	720/540/480	900/780/660	1,020/840/720
		L/s	117/100/83	117/100/83	150/117/100	200/150/133	250/217/183	283/233/200
	Motor output	kW	0.01	0.01	0.02	0.02	0.03	0.06
Sound power level (H/M/L)		dB	44/41/39	44/41/39	50/46/40	49/46/42	49/46/42	52/49/46
Sound pressure level (H/M/L)		dB(A)	33/30/28	33/30/28	39/35/29	38/35/31	39/36/31	41/38/35
Dimensions	H x W x D	mm	616 x 904 x 229	616 x 904 x 229	616 x 904 x 229	616 x 1,219 x 229	616 x 1,219 x 229	616 x 1,219 x 229
Pipe connections	Liquid	mm (inches)	Ø6.35 (Ø1/4)	Ø6.35 (Ø1/4)	Ø6.35 (Ø1/4)	Ø6.35 (Ø1/4)	Ø6.35 (Ø1/4)	Ø9.52 (Ø3/8)
	Gas 410 A	mm (inches)	Ø12.7 (Ø1/2)	Ø12.7 (Ø1/2)	Ø12.7 (Ø1/2)	Ø12.7 (Ø1/2)	Ø12.7 (Ø1/2)	Ø15.88 (Ø5/8)
	Drain piping		VP-20	VP-20	VP-20	VP-20	VP-20	VP-20
Net weight		kg	21	21	21	28	28	28

GLOBAL REMARKS	Rated conditions:	Cooling	Heating
	Indoor air temperature	27°C DB / 19°C WB	20°C DB
	Outdoor air temperature	35°C DB / 24°C WB	7°C DB / 6°C WB

Specifications are subject to change without notice.

R1 TYPE CONCEALED FLOOR STANDING Dimensions

1 4 x Ø12 holes (for floor fixing)
2 Electric equipment box
3 Power supply outlet
4 Air filter
5 Discharge duct connection flange
6 Refrigerant connection outlet (liquid pipes)
7 Refrigerant connection outlet (gas pipes)
8 Drain filter
9 Drain pan
10 Level adjustment bolt
11 Drain outlet VP20 (with vinyl hose)

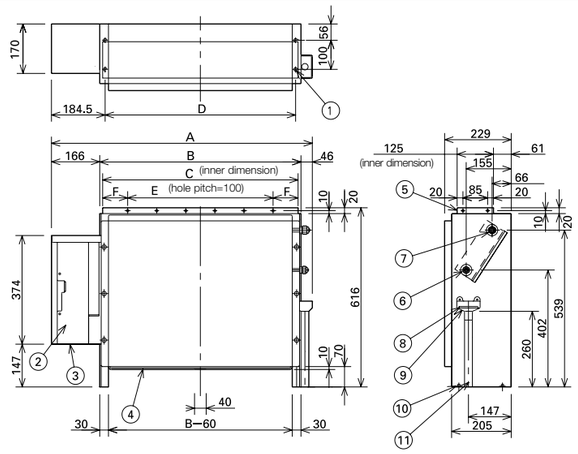

unit: mm

Indoor unit	A	B	C	D	E	F	Liquid pipes	Gas pipes
22 to 36 type	904	692	672	665	500	86	Ø6.35	Ø12.7
45 type	1,219	1,007	1,002	980	900	51		
56 type								
71 type							Ø9.52	Ø15.88