Panasonic®

Building Passion,
Building Solutions.
Panasonic Air Conditioning Systems

We face a time in which "quality air" differentiates business. It's a time for Panasonic to fully display its strengths. Our ability to assemble and build superior systems isn't just due to the rich resources we have as a comprehensive electronics manufacturer, but also to Panasonic's 100 years of tradition, where each person thinks and acts on their own initiative while working in a team to reach further heights. We do not compromise. Each of our independent selves is a one stop solution. We face our customers' challenges together with our customers and do all that we can to build effective systems. As a true partner for our customers, we strive to always be at the forefront of business.

- Please read the Installation Instructions carefully before installing the unit, and the Operating Instructions before using it.
- Specifications are subject to change without prior notice.
- The contents of this catalogue are accurate as of March 2023.
- Due to printing considerations, actual colours may vary slightly from those shown.
- All graphics are provided solely for the purpose of illustrating a point.

⚠ Do not add or replace refrigerant other than the specified type. Manufacturer is not responsible for damage or deterioration in safety due to usage of other refrigerant.

Authorised Dealer

ABS JAPAN_MARCH 2023

Panasonic Corporation
Heating and Ventilation A/C Company

QR Code is a registered trademark of DENSO WAVE.

Panasonic

Contact us using this QR code.

Absorption chiller inquiry

ABSORPTION CHILLERS
ABSORPTION CHILLERS/HEATERS

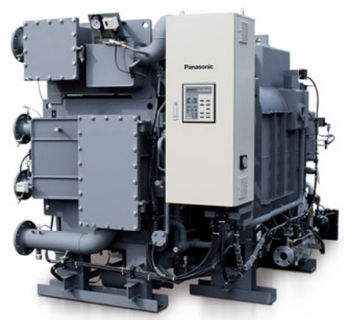

QUALITY AIR FOR LIFE

PANASONIC ABSORPTION CHILLERS

Panasonic has been one of the leading companies in absorption chiller industry for more than 50 years not only in Japan, but also in various countries all over the world.
It is no exaggeration to say that a large part of the absorption chillers on the market today are modeled after Panasonic absorption chillers. Panasonic has always set new standard in the absorption chiller industry.
With our high precision engineering ability and the spirit of craftsmanship, Panasonic continues to develop new innovative technologies for absorption chillers to bring comfortable environment to our customers.

over 50 years since launch

Made in Japan

Absorption chillers require high precision welding techniques, as the vacuum level inside the chiller greatly affects its lifespan. Production of absorption chillers takes place at our factory in Gunma, Japan, which has produced many skilled craftsmen, and we deliver high-quality products to our customers though out the world.

PROVEN QUALITY THROUGH LONG YEARS OF EXPERIENCE

Since the release of the 1st Panasonic absorption chiller in 1971, Panasonic has been one of the most popular absorption chiller brands in Japan. Our installation record in Japan reached 6.8 million RT (24,100 MW) and this number continues to grow, supported by customer's trust in our high quality products realized through long years of experience

Achieved **6.8** million RT (24,100 MW) installation in Japan

■ Cumulative cooling capacity of Panasonic absorption chiller in Japan

Unit : 1,000RT (1RT =3.52 kW)

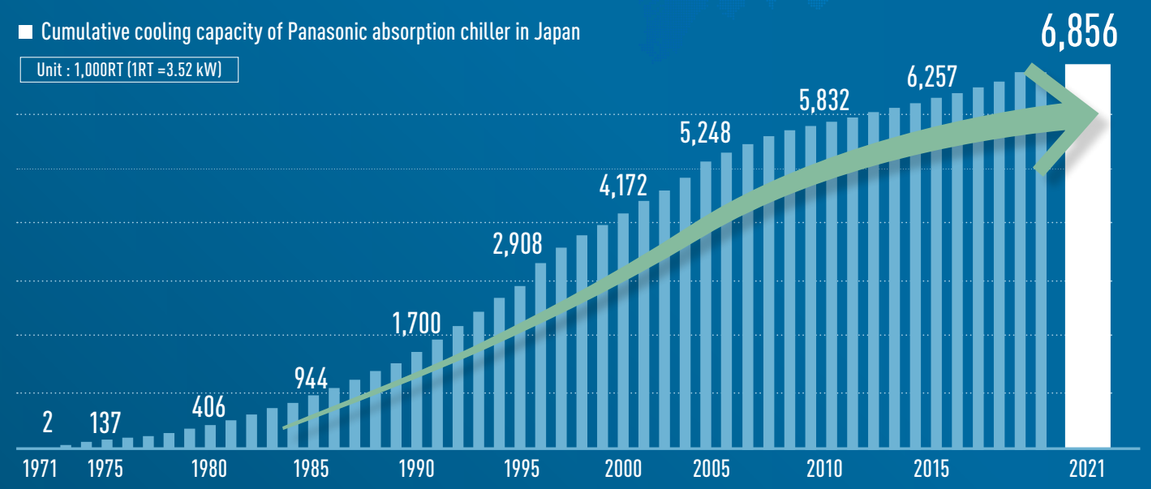

PRODUCT FEATURES

High reliability and Energy saving realized by Panasonic's advanced design

New purge system to ensure excellent vacuum condition

Double effect model only

In order to keep excellent performance of absorption chiller, it is important to keep good vacuum condition inside the chiller. The newly designed high performance purge system of Panasonic maintains the required operating pressure of the chiller and keep reliable operation. This can minimize chiller maintenance costs. Non condensable gas in the chiller is collected to the purge tank of the chiller and the collected gas shall be evacuated by the newly developed dry pump which is installed on the purge tank. The dry pump does not require troublesome maintenance like replacement of lubrication oil. Panasonic chiller is equipped with a conventional oil rotary vacuum pump as well for maintenance use and it enables stable and reliable operation.

Dry pump auto purging system (standard)
Double effect model only

High efficiency

By using various innovative technologies, Panasonic absorption chiller achieves high efficiency and this will help customers to reduce operation costs drastically. With two step evaporation and absorption technology and other additional heat exchangers, out flagship double effect CP type model (Gas fired) and R type model (Gas fired) achieve world class COP. Not only COP at the full load operation, Panasonic is pursuing high efficiency operation at part load operation. By using double inverter controlled absorbent pump, CP type model and R type model achieve excellent part load operation with high efficiency. F series steam type double effect models also have inverter controlled absorbent pump and offer excellent part load efficiency. All our models including single effect models are equipped with specially designed heat transfer tubes and plate type heat exchangers in order to increase efficiency and minimize operation costs.

Other features

Marine water boxes

Absorber and Condenser water boxes are marine type for easy access to the tubes without disconnecting any pipings. Cooling water circuit is normally open type, so it is necessary to clean Absorber and Condenser from time to time. This feature is important for ease of maintenance.

Anti corrosion design

- Parkerizing material processing has been done in order to remove the grease and rusty spot of material in order to make a uniform film on the surface of carbon steel.
- Lithium Molybdate is used as corrosion inhibitor which is effective and not toxic like conventional Lithium Chromate. Unlike conventional Lithium Nitrate, Lithium Molybdate does not generate ammonia, which has a significant negative impact on machine operation.

Gravity feed system

Evaporator and Absorber distribution trays are gravity feed type which eliminate a risk of clogging that can happen frequently in case of spray nozzle type solution feeding system. These trays are made of corrosion resistant stainless steel for enhanced durability.

Isolation valves on pumps

Absorbent and Refrigerant pumps suction and discharge connections are equipped with factory installed isolation valves which permit quick and easy servicing of pumps with minimum downtime. (Except Refrigerant pump of LJ cabin type.)

Plate heat exchangers

Plate heat exchangers increase the efficiency of the internal heat exchange and reduce the amount of heat input significantly as compared to conventional shell and tube heat exchangers.

ABSORPTION CHILLER LINEUP

DRIVING HEAT SOURCE	MODEL	
NATURAL GAS HIGH EFFICIENCY	Double Effect Direct Fired	
	Model : **QAW-CP100FG - QEW-CP700FG**	100 RT – 700 RT
	Capacity : **100 - 700 RT / 352 - 2,461 kW**	
DUAL FUEL (NATURAL GAS & DIESEL) HIGH EFFICIENCY	Double Effect Direct Fired	
	Model : **QAW-CP180FC - QEW-CP700FC**	180 RT – 700 RT
	Capacity : **180 - 700 RT / 633 - 2,461 kW**	
NATURAL GAS COMPACT TYPE	Double Effect Direct Fired	
	Model : **QAW-R100FG - QFW-R900FG**	100 RT – 900 RT
	Capacity : **100 - 900 RT / 352 - 3,165 kW**	
DUAL FUEL (NATURAL GAS & DIESEL) COMPACT TYPE	Double Effect Direct Fired	
	Model : **QBW-R210FC - QFW-R800FC**	210 RT – 800 RT
	Capacity : **210 - 800 RT / 738 - 2,813 kW**	
STEAM	Double Effect Steam Fired	
	Model : **QAW-100FS - QGW-12XFS**	100 RT – 1,150 RT
	Capacity : **100 - 1,150 RT / 352 - 4,044 kW**	
HOT WATER	Single Effect Hot Water Fired	
	Model : **QA-75LJ - QE-525LJ**	100 RT – 525 RT
	Capacity : **100 - 525RT / 352 - 1,846kW**	
HOT WATER (CABIN TYPE)	Single Effect Hot Water Fired	
	Model : **QP-25, 40, 50LJ**	25, 40, 50 RT
	Capacity : **25, 40, 50 RT / 88, 140, 176 kW**	
LOW PRESSURE STEAM	Single Effect Steam Fired	
	Model : **QA-100TJ - QE-700TJ**	100 RT – 700 RT
	Capacity : **100 - 700 RT / 352 - 2,461 kW**	

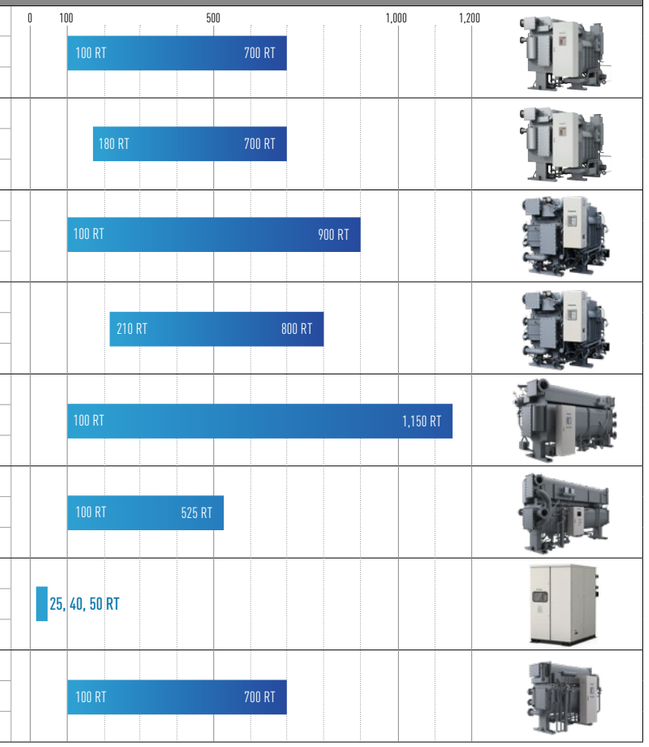

Please contact your nearest Panasonic sales representative for capacity ranges not listed in the catalog.

Nomenclature

□□□ - □□ □□□□ □ □ □

❶ ❷ ❸ ❹ ❺ ❻ ❼ ❽

	Item	Description	Code
❶	Product category	Absorption Chiller	**Q**
❷	Symbol for machine size	Small type chiller	**P**
		Standard type chiller	**A to G**
❸	Type of absorption cycle	Double effect	**W**
		Single effect	**None**
❹	Efficiency	Standard	**None**
		High efficiency	**CP**
		High partial load efficiency	**R**
❺	Capacity (USRT)	*If the capacity is 3 digits or less, it is shown as it is 25 - 12X *If the capacity is 4 digits, "X" may be added (Example) 1,000 >> 10X 1,150 >> 12X	**25 - 12X**

	Item	Description	Code
❻	Series	F series	**F**
		LJ series	**LJ**
		TJ series	**TJ**
❼	Heat source	Gas	**G**
		Oil	**K**
		Dual fuel	**C**
		Steam	**S**
		Low pressure steam	**None**
		Hot water	**None**
❽	Rank up	Enhanced heating capacity by 1 rank	**1**
		Enhanced heating capacity by 2 rank	**2**

Direct Fired Absorption Chiller/Heater

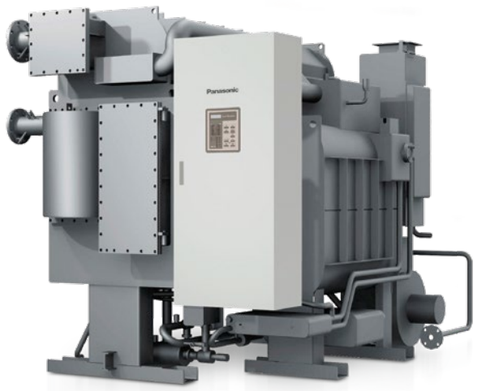

CP High Efficiency Type

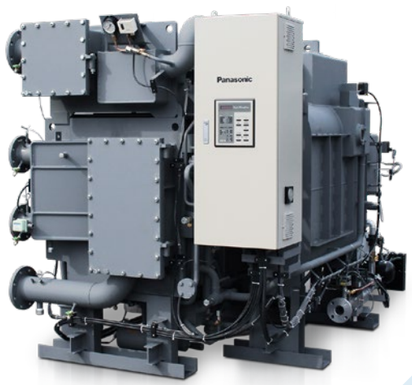

R Compact Type

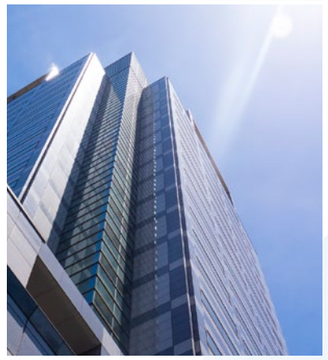

Realizes peak shaving of electricity by using natural gas or diesel oil

Panasonic CP/R double-effect direct fired absorption chillers/heaters produce chilled water and hot water for cooling and heating applications using natural gas or diesel oil as a driving energy.
Panasonic absorption chillers/heaters use water as refrigerant and Lithium Bromide solution as absorbent and use no CFCs or HCFCs. Also, since an absorption cycle is accomplished without a large motor-compressor drive arrangement, the customer can be assured of quiet and low-vibration operation. Panasonic absorption chillers/heaters use natural gas or diesel oil as a driving energy and use very little electricity, so it can be an excellent solution for saving electricity costs.
With Panasonic absorption chillers/heaters, the unit can be used for heating during winter months without additional cost of extra controls. In many applications the chillers/heaters can replace a traditional electric chiller and boiler design combination. Panasonic CP/R absorption chillers/heaters are widely used for large commercial buildings, shopping malls and various types of large-scale facilities.

FEATURES : DIRECT FIRED MODEL

Low fuel consumption

Circulation amount of Lithium Bromide solution is optimally controlled by the absorbent pump inverter. In addition, Parallel flow cycle structure dramatically improves partial load chiller efficiency especially when the cooling load is 50% or less or when the cooling water inlet temperature drops.

The CP type is equipped with the exhaust gas heat exchanger that recovers heat from the exhaust gas discharged from the high-temperature generator, reducing annual gas consumption by approximately 1.5%.

High Efficiency Type (CP type)

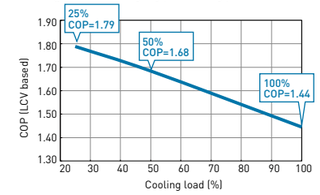

Conditions

- Chilled water outlet temperature = 7degC
- Chilled water flow rate = rated value (constant flow rate)
- Cooling water inlet temperature = according to JIS B 8622 2016 standard
- Cooling water flow rate = rated value (constant flow rate)

*This predicted part load efficiency curve is just for reference and it is not for guarantee.
*COP calculation is based on Lower calorific value (LCV). COP(LCV) = Cooling capacity (kW)/Heat source heat consumption (kW)

Compact Type (R type)

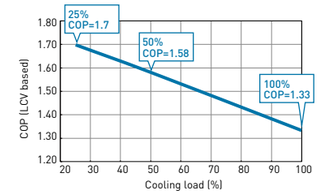

Conditions

- Chilled water outlet temperature = 7degC
- Chilled water flow rate = rated value (constant flow rate)
- Cooling water inlet temperature = according to JIS B 8622 2016 standard
- Cooling water flow rate = rated value (constant flow rate)

*This predicted part load efficiency curve is just for reference and it is not for guarantee.
*COP calculation is based on Lower calorific value (LCV). COP(LCV) = Cooling capacity (kW)/Heat source heat consumption (kW)

Dual fuel burner

» See page 10-11 (CP type) and page 14-15 (R type) for specification.

Usually, natural gas is used for normal operation, but in an emergency case such as power outage (blackout) or gas supply interruption, it is possible to switch the fuel to diesel oil for chiller operation.

CP type 180 - 700RT
R type 210 - 800RT

- Gas / oil switching operation with one unit
- Performance deterioration due to soot accumulation is detected by predictive maintenance operation
- High Temperature Generator (HTG) can be opened and washed with water

Fuel switching operation system example

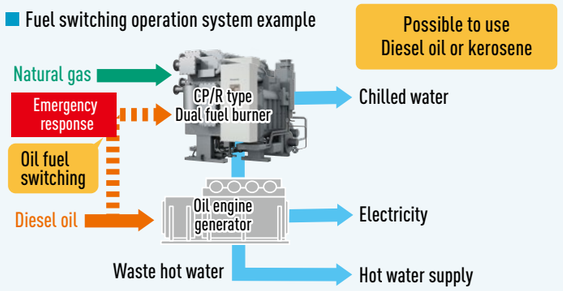

Cycle flow diagram

CP type Direct Fired Absorption Chiller (cooling mode)

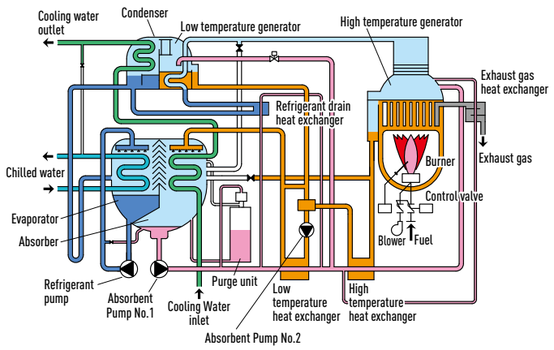

R type Direct Fired Absorption Chiller (cooling mode)

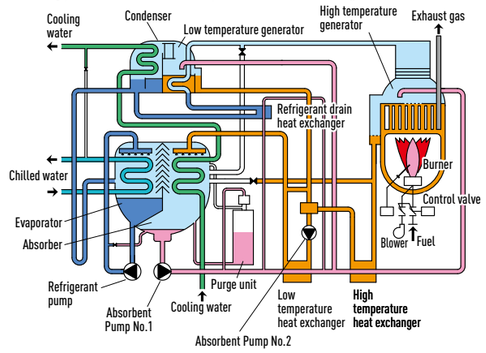

Pump operation | Pump stop | Switching valve open | Switching valve close | LiBr solution (Concentrated) | Hot water | Chilled water | Cooling water | Refrigerant | LiBr solution (Diluted) | Refrigerant vapor | Exhaust gas

SPECIFICATION

GAS FIRED ABSORPTION CHILLER/HEATER CP TYPE (High Efficiency Type)

			Model Name	QAW-CP***FG			
				100	120	150	180
Cooling capacity			kW	352	422	527	633
			USRT	100	120	150	180
Heating capacity			kW	235	282	353	424
			kcal/h	202,400	242,880	303,600	364,320
Chilled water	Temperature (Inlet→Outlet)		°C	12→7			
	Flow rate		m³/h	60.5	72.6	90.7	109
	Pressure drop		kPa	69.1	66.9	47.6	45.8
	Connection diameter (JIS)		A	80	100		125
Hot water	Temperature (Inlet→Outlet)		°C	56.7→60			
	Flow rate		m³/h	60.5	72.6	90.7	109
	Pressure drop		kPa	69.1	66.9	47.6	45.8
	Connection diameter (JIS)		A	80	100		125
Cooling water	Temperature (Inlet→Outlet)		°C	32→37			
	Flow rate		m³/h	100	120	150	180
	Pressure drop		kPa	65.0	54.6	57.8	50.8
	Connection diameter (JIS)		A	100	125		150
Power supply	Power			3 phase 380 V 50 Hz			
	Total current		A	11.6		14.8	
	Power capacirty		kVA	8.4		11.0	
Fuel System	Gas connection diameter		A	50			
	Gas Consumption	Cooling	kW	244	293	366	439
		Heating	kW	244	293	366	439
Dimension	Length (L)		mm	2,970	2,970	3,780	3,800
	Width (W)		mm	1,880	1,960	1,950	1,990
	Height (H)		mm	1,930	2,000	1,970	2,020
	Tube extracting space		mm	2,360	2,380	3,410	3,430
Weight	Operating weight		ton	4.7	5.3	6.3	7.0
	Total shipping weight		ton	4.2	4.7	5.6	6.2
Shipping method				1 piece			
Holding water amount		Chilled/Hot water	L	160	195	210	260
		Cooling water	L	280	355	400	500

Model Name	QBW-CP***FG				QCW-CP***FG		QDW-CP***FG		QEW-CP***FG		
	210	240	280	320	360	400	450	500	560	630	700
Cooling capacity kW	738	844	985	1,125	1,266	1,407	1,582	1,758	1,969	2,215	2,461
Cooling capacity USRT	210	240	280	320	360	400	450	500	560	630	700
Heating capacity kW	494	565	659	753	847	941	1,059	1,177	1,318	1,483	1,647
Heating capacity kcal/h	425,040	485,760	566,720	647,680	728,640	809,600	910,800	1,012,000	1,133,440	1,275,120	1,416,800
Chilled water Temperature (Inlet→Outlet) °C	12→7										
Chilled water Flow rate m³/h	127	145	169	194	218	242	272	302	339	381	423
Chilled water Pressure drop kPa	36.5	37.7	75.0	76.1	77.5	78.4	44.9	45.4	104.4	47.3	61.3
Chilled water Connection diameter (JIS) A	125		150				200				
Hot water Temperature (Inlet→Outlet) °C	56.7→60										
Hot water Flow rate m³/h	127	145	169	194	218	242	272	302	339	381	423
Hot water Pressure drop kPa	36.5	37.7	75.0	76.1	77.5	78.4	44.9	45.4	104.4	47.3	61.3
Hot water Connection diameter (JIS) A	125		150				200				
Cooling water Temperature (Inlet→Outlet) °C	32→37										
Cooling water Flow rate m³/h	210	240	280	320	360	400	450	500	560	630	700
Cooling water Pressure drop kPa	56.5	64.1	82.8	87.3	77.0	82.8	107.9	111.6	90.9	114.1	137.0
Cooling water Connection diameter (JIS) A	150		200				250		300		
Power supply Power	3 phase 380 V 50 Hz										
Power supply Total current A	17.9	19.7		22.0	21.9	23.3			33.5		37.1
Power supply Power capacirty kVA	13.6	15.1		17.0	16.9	18.0			26.4		29.3
Fuel System Gas connection diameter A	100								50		
Fuel System Gas Consumption Cooling kW	512	585	683	780	879	976	1,098	1,220	1,367	1,537	1,707
Fuel System Gas Consumption Heating kW	512	585	683	780	879	976	1,098	1,220	1,367	1,537	1,707
Dimension Length (L) mm	3,800		4,870				5,960		5,520	6,020	6,540
Dimension Width (W) mm	2,300		2,330		2,530		2,590		2,930		
Dimension Height (H) mm	2,340				2,570		2,610		2,930		
Dimension Tube extracting space mm	3,440		4,510		4,450		5,540		5,040	5,540	6,060
Weight Operating weight ton	9.6	10.0	12.0	12.6	15.0	15.6	18.9	19.6	22.9	24.8	26.5
Weight Total shipping weight ton	8.6	8.9	10.7	11.2	13.3	13.8	16.8	17.3	20.1	21.7	23.2
Shipping method	1 piece										
Holding water amount Chilled/Hot water L	380	415	490	535	635	680	790	850	910	990	1,070
Holding water amount Cooling water L	585	640	750	820	1,005	1,080	1,265	1,360	1,880	2,040	2,230

Note
(1) 1 USRT=3.52 kW (3024 kcal/h)
(2) Standard chilled water inlet and outlet temperature is 12°C→7°C. (Standard temperature differential is 5°C)
(3) Standard hot water inlet and outlet temperature is 56.7°C→60°C.
(4) Standard cooling water inlet and outlet temperature is 32°C→37°C. (Standard temperature differential is 5°C)
(5) Pressure drop unit conversion (1 kPa=0.102 mAq)
(6) Max. working pressure of chilled water, hot water and cooling water is 784 kPa (8 kg/cm²G)
(7) Above gas fired fuel connection diameter shows when the gas supply pressure is 1.96 kPa (200 mAq) (100~500 RT), 98 kPa (10,000 mmAq) (560~700 RT)
(8) Fouling factor of chilled water and cooling water are in accordance with JIS B8622-2016.
(9) Chiller performance tolerance is in accordance with JIS B8622-2016.
(10) Above figures are subject to change without notice.

SPECIFICATION

GAS/DIESEL OIL DUAL FUEL FIRED ABSORPTION CHILLER/HEATER CP TYPE (High Efficiency Type)

				QAW-CP***FC	QBW-CP***FC			
			Model Name	180	210	240	280	320
Cooling capacity			kW	633	738	844	985	1,125
Cooling capacity			USRT	180	210	240	280	320
Heating capacity			kW	421	491	561	655	748
Heating capacity			kcal/h	361,980	422,310	482,640	563,080	643,520
Chilled water	Temperature (Inlet→Outlet)		°C	12→7				
Chilled water	Flow rate		m³/h	109	127	145	169	194
Chilled water	Pressure drop		kPa	35.9	36.5	37.7	75.0	76.1
Chilled water	Connection diameter (JIS)		A	125			150	
Hot water	Temperature (Inlet→Outlet)		°C	56.7→60				
Hot water	Flow rate		m³/h	109	127	145	169	194
Hot water	Pressure drop		kPa	35.9	36.5	37.7	75.0	76.1
Hot water	Connection diameter (JIS)		A	125			150	
Cooling water	Temperature (Inlet→Outlet)		°C	32→37				
Cooling water	Flow rate		m³/h	180	210	240	280	320
Cooling water	Pressure drop		kPa	70.6	76.4	84.2	78.2	82.7
Cooling water	Connection diameter (JIS)		A	150			200	
Power supply	Power			3 phases, 380 V, 50 Hz				
Power supply	Total current (50/60Hz)		A	18.1	19.9	21.7	21.7	25.4
Power supply	Power capacirty (50/60Hz)		kVA	11.8	13.3	14.7	14.7	17.8
Fuel System	Fuel connection diameter	Gas	A	50	100			
Fuel System	Fuel connection diameter	Diesel oil	A	15 x2				
Fuel System	Gas Consumption	Cooling: LHV gas calorific value	kW	444	519	593	692	791
Fuel System	Gas Consumption	Heating: LHV gas calorific value	kW	444	519	593	692	791
Fuel System	Diesel oil consumption	Cooling	L/h	43.9	51.1	58.5	68.2	77.9
Fuel System	Diesel oil consumption	Heating	L/h	44.4	51.8	59.2	69.1	79.0
Dimension	Length (L)		mm	3,780	3,800		4,970	5,000
Dimension	Width (W)		mm	2,240	2,460			
Dimension	Height (H)		mm	2,280	2,340		2,360	
Dimension	Tube extracting space		mm	3,430	3,440		4,510	
Weight	Operating weight		ton	8.0	10.2	10.5	12.5	13.3
Weight	Total shipping weight		ton	7.2	9.2	9.4	11.2	11.9
Shipping method				1 piece				
Holding water amount	Chilled/Hot water		L	280	380	415	490	535
Holding water amount	Cooling water		L	500	610	670	770	840

QCW-CP***FC		QDW-CP***FC		QEW-CP***FC		
360	400	450	500	560	630	700
1,266	1,407	1,582	1,758	1,969	2,215	2,461
360	400	450	500	560	630	700
842	935	1,052	1,169	1,309	1,473	1,637
723,960	804,400	904,950	1,005,500	1,126,160	1,266,930	1,407,700
12→7						
218	242	272	302	339	381	423
77.5	78.4	44.9	45.4	104.4	47.3	61.3
150		200				
56.7→60						
218	242	272	302	339	381	423
77.5	78.4	44.9	45.4	104.4	47.3	61.3
150		200				
32→37						
360	400	450	500	560	630	700
72.3	78.2	99.5	103.2	85.7	107.4	128.2
200		250		300		
3 phases, 380 V, 50 Hz						
27.3		29.9		41.0		45.2
19.4		21.5		30.6		34.1
100		50				
20 x2						25 x2
890	988	1,112	1,236	1,384	1,557	1,730
890	988	1,112	1,236	1,384	1,557	1,730
87.7	97.5	109.6	121.8	136.4	153.4	170.5
88.9	98.7	111.0	123.4	138.2	155.5	172.8
4,900		5,980		5,530	6,020	6,550
2,740		2,710	2,760	3,030	3,200	
2,620		2,710	2,750	2,980	3,000	3,100
4,450		5,540		5,040	5,540	6,060
16.5	17.0	19.4	20.8	25.5	27.6	29.9
14.7	15.1	17.3	18.5	22.5	24.3	26.4
1 piece						
635	680	790	850	910	990	1,070
1,100	1,180	1,290	1,390	2,060	2,230	2,420

Note
(1) 1 USRT=3.52 kW (3024 kcal/h)
(2) Standard chilled water inlet and outlet temperature is 12°C→7°C. (Standard temperature differential is 5°C)
(3) Standard hot water inlet and outlet temperature is 56.7°C→60°C.
(4) Standard cooling water inlet and outlet temperature is 32°C→37°C. (Standard temperature differential is 5°C)
(5) Pressure drop unit conversion (1 kPa=0.102 mAq)
(6) Max. working pressure of chilled water, hot water and cooling water is 784 kPa (8 kg/cm²G)
(7) Above gas fired fuel connection diameter shows when the gas supply pressure is 1.96 kPa (200 mAq) (180~400 RT), 98 kPa (10,000 mmAq) (450~700 RT)
(8) Calorific value of diesel oil is calculated based on (HCV) 46,046kJ/kg, (LCV) 43,256kJ/kg. Specific gravity of diesel oil is considered as 0.846.
(9) Fouling factor of chilled water and cooling water are in accordance with JIS B8622-2016.
(10) Chiller performance tolerance is in accordance with JIS B8622-2016.
(11) Above figures are subject to change without notice.

SPECIFICATION

GAS FIRED ABSORPTION CHILLER/HEATER R TYPE (Compact Type)

					QAW-R***FG				QBW-R***FG	
Model Name					100	120	150	180	210	240
Cooling capacity				kW	352	422	527	633	738	844
				USRT	100	120	150	180	210	240
Heating capacity				kW	246	296	369	443	517	591
				kcal/h	211,800	254,160	317,700	381,240	444,780	508,320
Chilled water	Temperature (Inlet→Outlet)			°C	12→7					
	Flow rate			m³/h	60.5	72.6	90.7	109	127	145
	Pressure drop			kPa	40.6	41.0	54.6	56.5	53.6	54.4
	Connection diameter (JIS)			A	100				125	
Hot water	Temperature (Inlet→Outlet)			°C	56.5→60					
	Flow rate			m³/h	60.5	72.6	90.7	109	127	145
	Pressure drop			kPa	40.6	41.0	54.6	56.5	53.6	54.4
	Connection diameter (JIS)			A	100				125	
Cooling water	Temperature (Inlet→Outlet)			°C	32→37.1					
	Flow rate			m³/h	100	120	150	180	210	240
	Pressure drop			kPa	35.6	40.6	61.1	72.2	59.9	67.5
	Connection diameter (JIS)			A	125				150	
Power supply	Electric power supply				3 phase 380 V 50 Hz					
	Total electric current			A	12.2		15.5		17.0	
	Power capacirty (50/60Hz)			kVA	8.9		11.6		12.8	
Fuel System	Gas connection diameter			A	50				100	
	Gas Consumption	Cooling	LHV gas calorific value	kW	264	318	397	475	555	634
		Heating	LHV gas calorific value	kW	264	318	397	475	555	634
Dimension	Length (L)			mm	2,770		3,750		3,800	
	Width (W)			mm	1,640		1,680		1,930	
	Height (H)			mm	1,890		1,950		2,160	
	Tube extracting space			mm	2,390		3,410		3,450	
Weight	Operating weight			ton	4.6	4.9	5.9	6.3	7.9	8.2
	Total shipping weight			ton	4.1	4.3	5.3	5.6	7.0	7.3
Shipping method					1 piece					
Holding water amount	Chilled/Hot water			L	140	160	190	210	270	290
	Cooling water			L	330	360	410	460	580	630

QBW-R***FG		QCW-R***FG		QDW-R***FG		QEW-R***FG			QFW-R***FG	
280	320	360	400	450	500	560	630	700	800	900
985	1,125	1,266	1,407	1,582	1,758	1,969	2,215	2,461	2,813	3,165
280	320	360	400	450	500	560	630	700	800	900
690	788	887	985	1,108	1,231	1,379	1,552	1,724	1,970	2,217
593,040	677,760	762,480	847,200	953,100	1,059,000	1,186,080	1,334,340	1,482,600	1,694,400	1,906,200
12→7										
169	194	218	242	272	302	339	381	423	484	544
37.5	38.4	39.6	40.8	37.1	37.8	38.6	52.9	69.8	51.4	67.9
150				200					250	
56.5→60										
169	194	218	242	272	302	339	381	423	484	544
37.5	38.4	39.6	40.8	37.1	37.8	38.6	52.9	69.8	51.4	67.9
150				200					250	
32→37.1										
280	320	360	400	450	500	560	630	700	800	900
120.0	133.7	84.4	90.2	98.3	107.2	85.1	114.5	144.1	102.9	130.0
200				250		300			350	
3 phase 380 V 50 Hz										
20.2		30.3		32.9		39.4			45.4	49.3
15.5		23.8			25.9	31.3			36.2	39.4
100						50				
740	846	952	1,057	1,189	1,322	1,480	1,665	1,850	2,114	2,379
740	846	952	1,057	1,189	1,322	1,480	1,665	1,850	2,114	2,379
4,840		4,850		4,850		5,050	5,590	6,090	5,760	6,190
2,040		2,190		2,320		2,610	2,990		3,200	
2,160		2,370		2,600		2,850	2,900		3,330	
4,470		4,500				4,600	5,200	5,700	5,200	5,700
9.6	10.2	12.3	12.5	15.0	15.4	19.5	22.8	24.2	29.4	31.4
8.6	9.1	11.0	11.1	13.3	13.6	17.1	20.2	21.4	25.7	27.4
1 piece										
330	370	410	450	530	570	690	750	820	1,040	1,130
700	760	920	990	1,190	1,270	1,680	1,810	1,950	2,630	2,830

Note
(1) 1 USRT=3.52 kW (3024 kcal/h)
(2) Standard chilled water inlet and outlet temperature is 12°C→7°C. (Standard temperature differential is 5°C)
(3) Standard hot water inlet and outlet temperature is 56.5°C→60°C.
(4) Standard cooling water inlet and outlet temperature is 32°C→37.1°C. (Standard temperature differential is 5.1°C)
(5) Pressure drop unit conversion (1 kPa=0.102 mAq)
(6) Max. working pressure of chilled water, hot water and cooling water is 784 kPa (8 kg/cm²G)
(7) Above gas fired fuel connection diameter shows when the gas supply pressure is 1.96 kPa (200 mAq) (100~500 RT), 98 kPa (10,000 mmAq) (560~900 RT)
(8) Fouling factor of chilled water and cooling water are in accordance with JIS B8622-2016.
(9) Chiller performance tolerance is in accordance with JIS B8622-2016.
(10) Above figures are subject to change without notice.

SPECIFICATION

GAS/OIL DUAL FUEL FIRED ABSORPTION CHILLER/HEATER R TYPE (Compact Type)

					QBW-R***FC				QCW-R***FC		QDW-R***FC		QEW-R***FC			QFW-R***FC
Model Name					210	240	280	320	360	400	450	500	560	630	700	800
Cooling capacity				kW	738	844	985	1,125	1,266	1,407	1,582	1,758	1,969	2,215	2,461	2,813
				USRT	210	240	280	320	360	400	450	500	560	630	700	800
Heating capacity				kW	548	627	731	836	941	1,059	1,177	1,324	1,471	1,646	1,853	2,090
				kcal/h	471,690	539,070	628,920	718,760	809,260	910,740	1,012,220	1,138,640	1,265,060	1,415,560	1,593,580	1,797,400
Chilled water	Temperature (Inlet→Outlet)			°C	12→7				12→7							
	Flow rate			m³/h	127	145	169	194	218	242	272	302	339	381	423	484
	Pressure drop			kPa	53.6	54.4	37.5	38.4	39.6	40.8	37.1	37.8	38.6	52.9	69.8	51.4
	Connection diameter (JIS)			A	125		150		150		200					250
Hot water	Temperature (Inlet→Outlet)			°C	56.5→60				56.5→60							
	Flow rate			m³/h	127	145	169	194	218	242	272	302	339	381	423	484
	Pressure drop			kPa	53.6	54.4	37.5	38.4	39.6	40.8	37.1	37.8	38.6	52.9	69.8	51.4
	Connection diameter (JIS)			A	125		150		150		200					250
Cooling water	Temperature (Inlet→Outlet)			°C	32→37.1				32→37.1							
	Flow rate			m³/h	210	240	280	320	360	400	450	500	560	630	700	800
	Pressure drop			kPa	59.9	67.5	120.0	133.7	84.4	90.2	98.3	107.2	85.1	114.5	144.1	121.7
	Connection diameter (JIS)			A	150		200		200		250		300			350
Power supply	Electric power supply				3 phase 380 V 50 Hz				3 phase 380 V 50 Hz							
	Total electric current			A	17.7		22.5		29.7	32.6		36.4	39.4			48.2
	Power capacirty (50/60Hz)			kVA	12.4		16.4		23.3	25.6		28.8	31.3			38.5
Fuel system	Fuel connection diameter		Gas	A	100				100			50				
			Diesel	A	15 x 2				15 x 2	20 x 2				25 x 2		
	Gas Consumption	Cooling	LHV gas calorific value	kW	555	634	740	846	952	1,057	1,189	1,322	1,480	1,665	1,850	2,114
		Heating	LHV gas calorific value	kW	588	673	785	897	1,010	1,136	1,263	1,421	1,578	1,766	1,988	2,242
	Diesel oil consumption		Cooling	L/h	54.6	62.4	72.9	83.2	93.6	104.1	117.0	130.0	145.6	163.8	182.0	208.1
			Heating	L/h	57.8	66.2	77.2	88.2	99.3	111.8	124.2	139.8	155.3	173.7	195.6	220.6
Dimension	Length			(L) mm	3,900		4,770	5,220	4,950		4,870	4,950	5,350	5,590	6,090	6,100
	Width			(W) mm	2,270		2,350	2,390	2,480		2,670	2,720	3,030	3,090		3,350
	Height			(H) mm	2,150		2,200		2,350		2,600		2,850	2,980		3,330
	Tube extracting space			mm	3,450		4,470		4,500				4,600	5,200	5,700	5,200
Weight	Operating weight			ton	8.2	8.7	10.0	11.2	12.9	13.5	15.7	16.5	20.7	23.8	25.4	30.3
	Total shipping weight			ton	7.4	7.8	9.1	10.2	11.6	12.1	14.0	14.7	18.3	21.2	22.6	26.6
Shipping method					1 piece				1 piece							1 piece*(9)
Holding water amount		Chilled/Hot water		L	270	290	330	370	410	450	530	570	690	750	820	1,040
		Cooling water		L	580	630	700	760	920	990	1,190	1,270	1,680	1,810	1,950	2,630

Note
(1) 1 USRT=3.52 kW (3024 kcal/h)
(2) Standard chilled water inlet and outlet temperature is 12°C→7°C. (Standard temperature differential is 5°C)
(3) Standard hot water inlet and outlet temperature is 56.5°C→60°C.
(4) Standard cooling water inlet and outlet temperature is 32°C→37.1°C. (Standard temperature differential is 5.1°C)
(5) Pressure drop unit conversion (1 kPa=0.102 mAq)
(6) Max. working pressure of chilled water, hot water and cooling water is 784 kPa (8 kg/cm^{2}G)
(7) Above gas fired fuel connection diameter shows when the gas supply pressure is 1.96 kPa (200 mAq) (210~500 RT), 98 kPa (10,000 mmAq) (560~800 RT)
(8) Calorific value of diesel oil is calculated based on (HCV) 46,046kJ/kg, (LCV) 43,256kJ/kg. Specific gravity of diesel oil is considered as 0.846.
(9) QFW-R800FC requires sperate shipment of the burner in order to keep the carry-in dimension W3200 or less. Burner shall be assembled at site by the customer.
(10) Fouling factor of chilled water and cooling water are in accordance with JIS B8622-2016.
(11) Chiller performance tolerance is in accordance with JIS B8622-2016.
(12) Above figures are subject to change without notice.

SCOPE OF ORDER

GAS FIRED MODEL

Item			Standard	Option
Standard			JIS B 8622	No option
Chilled water	Chilled water	Temperature	Inlet : 12°C Outlet : 7°C	Outlet : 5°C thru 12°C Temperature difference 3°C thru 10°C
		Flow rate	0.605 m³/h·RT	Changes depending on chilled water temperature difference (min. 50%)
	Max. working pressure		0.784 MPa	1.0 MPaG / 1.6 MPaG
	Hydrostatic test pressure		Max. working press. x 1.5	No option
	Fouling factor		JIS (0.086 m²K/kW)	Contact Panasonic
	Connecting flange		JIS	ANSI, DIN
	Material of tube		Copper tube	Contact Panasonic
	Water quality		Refer to JRA-GL02E-1994	No option
	Structure of water header		Removal type	Marine type
	Manufacturing standard of water header		Panasonic Standard	No option
Cooling water	Temperature		Inlet : 32°C Outlet : 37°C (CP type), 37.1°C (R type)	Inlet : 20°C thru 33°C Temperature difference 3°C thru 10°C
	Flow rate		1.0 m³/h·RT	Within the water flow rate range of each model
	Max. working pressure		0.784 MPa	1.0 MPaG / 1.6 MPaG
	Hydrostatic test pressure		Max. working press. x 1.5	No option
	Fouling factor		JIS (0.086 m²K/kW)	Contact Panasonic
	Connecting flange		JIS	ANSI, DIN
	Material of tube		Copper tube	Contact Panasonic
	Water quality		Refer to JRA-GL02E-1994	No option
	Structure of water header		Marine type	No option
	Manufacturing standard of water header		Panasonic Standard	No option
Fuel	Kind of fuel		Natural gas	LPG, diesel oil etc. Contact Panasonic
	Supply gas pressure		Refer to catalog data	
Electricity	Phase Voltage Frequency		3 ø 380 V 50 Hz (Voltage regulation : within ±10%) (Frequency regulation : within ±5%)	3 ø 200-460 V 50·60 Hz (Voltage regulation : within ±10%) (Frequency regulation : within ±5%)
Thermal insulation			Insulation by purchaser	Cold surface
Shipment			1 section shipment (LiBr charged)	Contact Panasonic
Control	Safety functions		Chilled water freezing protection	Cooling water flow switch
			Chilled water flow switvh	
			Cooling water temperature	
			Generator temperature	
			Generator pressure	
			Exhaust gas temperature	
			Crystallization protection	
			Motor protection	
	Capacity control		Digital PID control by CHW temp	No option
			Remote control of CHW/HTW by 4-20 mA	No option
			Inverter control of #1 & #2 ABS pump	No option
	Parts		Selected by Panasonic	No option
Control panel	Painting		Munsell No. 5Y-7/1	No option
	Indication lamps		Operation : Green Stop : Orange Alarm : Red	No option
	Display		LED	No option
	External terminals (No-voltage normal open contact)		Operation indication	Contact Panasonic
			Stop indication	
			Alarm indication	
			Answer back indication	
			Combustion indication	
			Dilution operation indication	
			Cooling mode indication	
			Heating mode indication	
			Equioment side alarm indication	
			Pridiction indication	
	BMS		-	(R type) Modbus, LonWorks (CP type) LonWorks
	Installation condition		Indoor type	Outdoor type (Contact panasonic)
	Parts		Selected by Panasonic	No option
Electrical wiring and piping			Wire : 600V grade polyvinyl chloride-insulated wires	No option
			Pipe : plica tube (Flexible metal conduits)	No option
Installation condition	Installation condition		Indoor type	Outdoor type (Contact panasonic)
	Ambient temperature		5°C thru 40°C	No option
	Ambient humidity		Relative humidity : Max 90% at 45°C	No option
	Atmosphere		Be sure the following are not present *Corrosive gas *Explosive gas *Poisonous gas	Contact panasonic
Factory test			Leak test of vacuum side Leak test of gas train Electric insulation resistance test Dielectric breakdown test Function test of electric circuit	Performance test

TYPICAL PIPING DIAGRAM

In order to prevent freezing up of chilled water during dilute operation of the chiller,
continue the operation of the chilled water pumps and air-conditioner until the dilute operation will be completed (shortest 6 minutes).

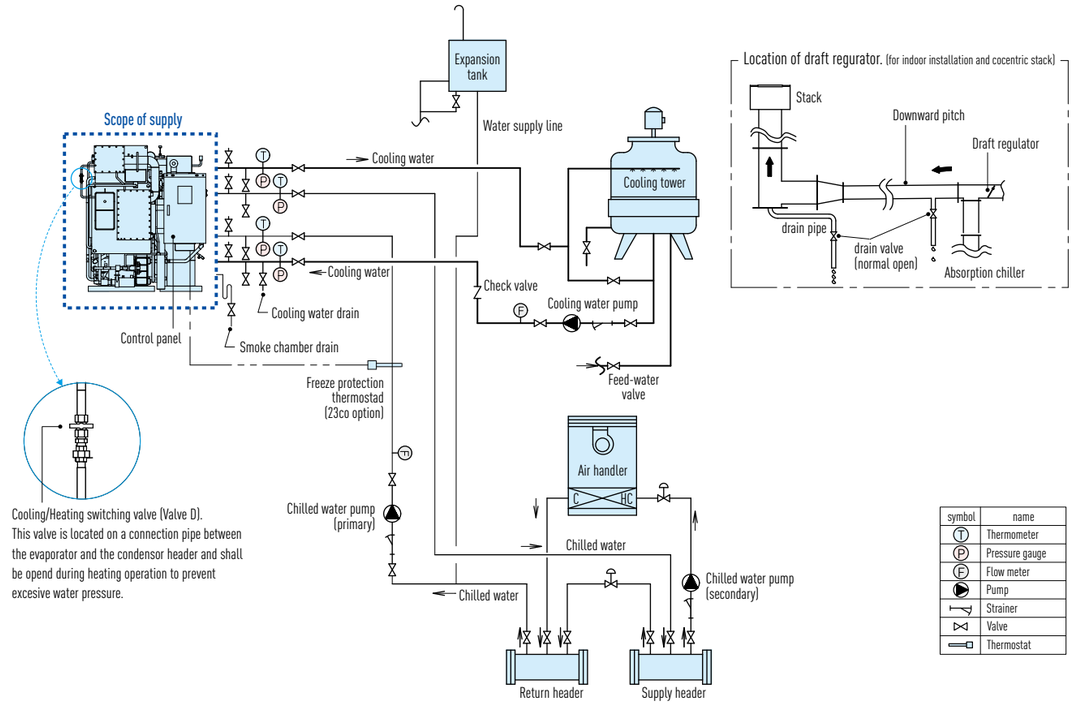

⚠ General remarks on piping

1. Out of dash line shall be purchaser's supply.
2. Refer to the over all dimensions and specifications sheet for confirming nozzle location/size.
3. Cooling water flow rate should be constant in the range of 100-120% of the rated value. Chilled/hot water flow rate shall not be less than 50% of the rated value. Otherwise chiller/heater will run down by safety cutout of "Chilled/hot water flow". To keep stable temperature of the leaving chilled water, fluctuation of the chilled water flow rate should be less or equal 20% per 10 minutes. In case of the secondary chilled/hot water pump will be stopped and/or the air handler will be stopped before a dilution operation is completed, the retained water volume of the primary chilled/hot water system be more than 36 liter/RT.
4. Location of chilled/hot water pump, cooling water pump, expansion tank should be designed with static pressure and pump head in mind. Max. working pressure of chilled/hot water and cooling water are indicated on the specification sheet.
5. Cooling water temperature should be controlled in accordance with "Cooling water temperature control".
6. Independent chilled/hot water pump and cooling water pump should be provided to each chiller/heater.
7. In case of a lining pipe is applied to cooling water piping, thermal resistance type shall be selected. Because the cooling water temp in the chiller/heater will reach around 80°C.
8. Quality management of cooling water is necessary. Poor water quality will cause a corrosion and/or scaling problem.
9. Install a 10 mesh strainer in each water pipe.
10. Before connecting pipes, clean the inside of pipes.
11. To prevent water freezing in winter, the freeze protection thermostat(23CO) will be recommended. When discharging the water in the chiller/heater, it has to be discharged from the valve of the chiller/heater pipe/header bottom.
12. Connection with flue pipe and stack. Designed flue temperature is 100°C and it is very possible to have a water condensation.
    1) Flue pipe should be thermally insulated.
    2) Horizontal flue piping should have downward pitch and a drain pipe with a valve. Recommended a drain pipe size is 1 inch or more.
    3) Vertical flue piping should have a drain pipe at the bottom. Recommended a drain pipe size is 1 inch or more.
    4) Flue draft should be 0-49 Pa and a draft regulator is required to stabilize the flue draft.
    5) Flue/stack of chiller/heater should be independent from other equipment such as incinerator, generator, etc.
    6) Stack/exhaust outlet should be located away from cooling tower and/or air intake.
13. To maintain the chiller/heater well, undermentioned equipment should be installed further to the stop valve near the nozzle of chilled/hot, cooling and waste hot water connection. And provide the following.
    1) Fuel flowmeter near the chiller/heater.
    2) Thermometer and pressure gauge near the nozzle of chilled/hot, cooling and waste hot water.
    3) Air vent valve at the highest part of chilled/hot, cooling and waste hot water system.
    4) Drain valve at the lowest part of chilled/hot, cooling and waste hot water in between each nozzle and stop valve. The drain pipe should run to ditch.
    5) drain pipe at the flue chamber that runs to ditch.
    6) 3/2 inch vent and valve in between each nozzle and stop valve for chemical cleaning.
14. Open the cooling/heating switching valve(valve D) during heating operation to release the pressure of cooling water system in the chiller/heater if the cooling water was not discharged.

Note: Valve D doesn't exsit if the degin working pressure of Chilled water header and cooling water header is defference.

Double Effect Steam Fired Absorption Chiller

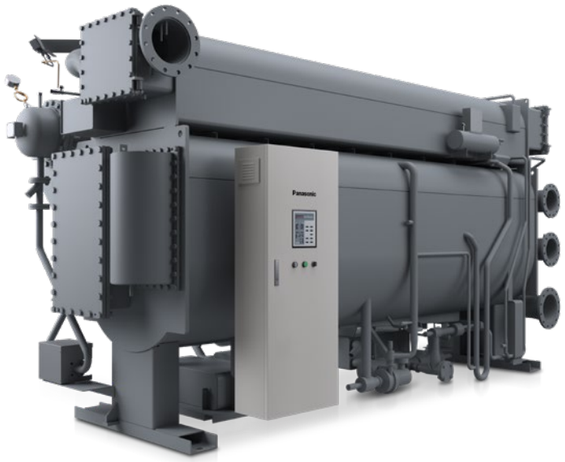

F series

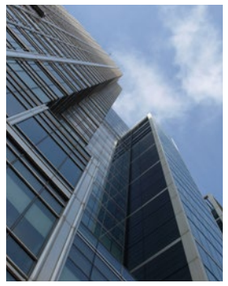

Ideal energy solution for large-scale facilities

Panasonic F series double-effect steam fired absorption chillers produce chilled water for cooling or process purposes using steam as driving energy.
Panasonic F series absorption chillers use water as refrigerant and Lithium Bromide solution as absorbent and use no CFCs or HCFCs. Also, since an absorption cycle is accomplished without a large motor-compressor drive arrangement, the customer can be assured of quiet and low -vibration operation.
Panasonic F series absorption chillers use steam (standard pressure : 8 kg/cm^{2}G) as a driving energy and use very little electricity. By converting various kinds of exhaust heat into steam, customers can use it as a heat source of absorption chiller and they can realize diversification of energy and save electricity bill for air conditioning.
In addition,
Panasonic F series absorption chillers achieved very high efficiency by adopting various innovative technologies, so customer can enjoy further savings of operation costs.
Panasonic F series absorption chillers are widely used for large-scale facilities like hospital, large commercial buildings, shopping malls and various types of large-scale facilities, and also used for various district cooling projects in combination with cogeneration systems (Gas turbine, Gas engine, etc.).

FEATURES : DOUBLE EFFECT STEAM FIRED MODEL

Low steam consumption

Circulation amount of Lithium Bromide solution is optimally controlled by the inverter driven absorbent pump*. Therefore, when the cooling load is 50% or less or when the cooling water inlet temperature drops steam consumption rate would be dramatically improved.

■ Predicted partial load performance curve (F series, steam double effect)

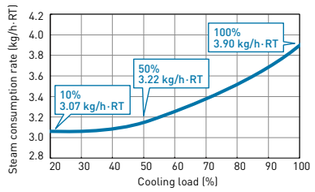

Conditions

- Chilled water outlet temperature = 7degC
- Chilled water flow rate = rated value (constant flow rate)
- Cooling water inlet temperature = according to JIS B 8622 2016 standard
- Cooling water flow rate = rated value (constant flow rate)
- Steam supply pressure = 784 kPa

*Above predicted partial load efficiency curve is just for reference and it is not for guarantee.

High corrosion resistance drain heat exchanger

Stainless steel brazed type plate heat exchanger is used as a steam drain heat exchanger which is highly resistant to corrosion, and it is designed to reduce steam consumption.

Steam control valve and steam shut off valve (with emergency shut-off function)

Steam control valve and steam shut-off valve are supplied by Panasonic. Steam shut-off valve is designed to shut off steam in an emergency even in the event of a power outage to prevent crystallization in the chiller.

■ Panasonic supplied electric type steam control valve and shut-off valve

>> See page 23 for more details.

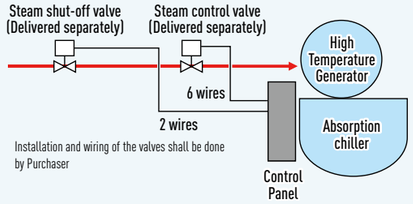

Cycle flow diagram

■ F series Steam Fired Absorption Chiller

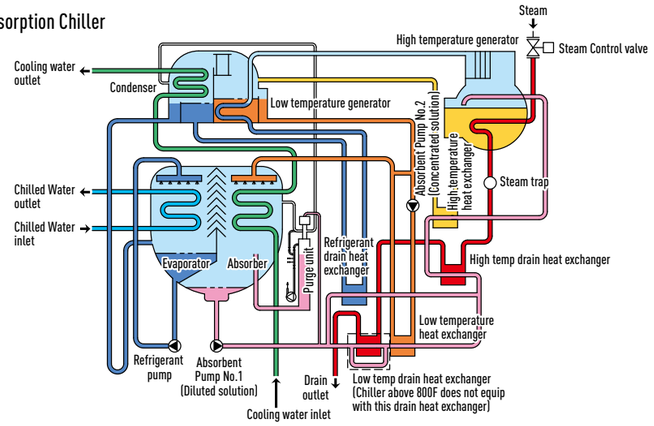

SPECIFICATION

DOUBLE EFFECT STEAM FIRED ABSORPTION CHILLER F SERIES

				QAW-***FS			QBW-***FS		QCW-***FS	
			Model Name	100	130	160	200	250	300	360
Cooling capacity			kW	352	457	563	703	879	1,055	1,266
			USRT	100	130	160	200	250	300	360
Chilled water	Temperature (Inlet→Outlet)		°C	12→7						
	Flow rate		m³/h	60.5	78.6	96.8	121	151	181	218
	Pressure drop		kPa	52	71	77	67	50	49	58
	Connection diameter (JIS)		A	100			125	150		
Cooling water	Temperature (Inlet→Outlet)		°C	32→37.3						
	Flow rate		m³/h	100	130	160	200	250	300	360
	Pressure drop		kPa	33	51	63	46	94	68	84
	Connection diameter (JIS)		A	125			150	200		
Steam	Steam supply pressure		kPaG	Saturated steam 784 kPa						
	Steam consumption		kg/h	390	507	624	780	975	1,170	1,404
	Connection diameter (JIS)	Steam inlet	A	50				65		80
		Drain outlet	A	25			32			40
		Steam control	A	25			40			
		Steam shut-off	A	25			40			
Power supply	Electric power supply			3 phase 380 V 50 Hz						
	Total electric current		A	11.2			13.7		14.0	
	Power capacity (50/60Hz)		kVA	8.6			10.7		10.9	
Dimension	Length (L)		mm	2,645	3,665		3,710	4,760	4,830	
	Width (W)		mm	1,490			1,665		1,770	
	Height (H)		mm	2,200			2,250		2,390	
	Tube extracting space		mm	2,400	3,400			4,500		
Weight	Operating weight		ton	4.4	5.5	5.8	7.0	8.3	10.7	11.3
	Total shipping weight		ton	3.9	5.0	5.2	6.3	7.5	9.5	10.0
Shipping method				1	1	1	1	1	1	1
Holding water amount		Chilled water	L	130	150	170	240	280	340	360
		Cooling water	L	340	380	420	580	630	890	950

QDW-***FS		QEW-***FS			QFW-***FS			QGW-***FS	
400	450	500	560	630	700	800	900	10X	12X
1,407	1,582	1,758	1,969	2,215	2,461	2,813	3,165	3,516	4,044
400	450	500	560	630	700	800	900	1,000	1,150
12→7									
242	272	302	339	381	423	484	545	605	696
55	48	39	54	72	49	68	91	63	95
200					250			300	
32→37.3						32→37.2			
400	450	500	560	630	700	800	900	1,000	1,150
86	94	68	90	120	78	95	126	85	125
250		300			350			400	
Saturated steam 784 kPa									
1,560	1,755	1,950	2,184	2,457	2,730	3,120	3,510	3,900	4,485
80			100			125		150	
40		50				65			
50					65				80
50					65				80
3 phase 380 V 50 Hz									
21.1		23.1	24.9		25.9	25.4		33.1	33.1
16.8		18.4	19.9		20.7	20.3		26.6	26.6
4,850		5,040	5,590	6,080	5,690	6,190	6,710	6,430	7,460
1,975		2,300			2,500			3,000	
2,600		2,900			3,330			3,450	
4,500		4,600	5,100	5,600	5,200	5,700	6,200	6,000	7,000
13.1	13.7	17.8	19.9	21.3	25.3	27.0	28.9	34.5	38.3
11.5	12.0	15.2	17.1	18.4	21.5	22.9	24.6	29.4	32.6
1	1	1	1	1	1	1	1	1*(6)	1*(6)
460	480	650	710	770	990	1,055	1,130	1,406	1,607
1,110	1,190	1,870	2,010	2,140	2,790	2,962	3,144	3,667	4,106

Note
(1) 1 USRT=3.52 kW (3024 kcal/h)
(2) Standard chilled water inlet and outlet temperature is 12°C→7°C. (Standard temperature differential is 5°C)
(3) Standard cooling water inlet and outlet temperature is 32°C→37.3°C. (QGW-HS10XFS and QGW-HS12XFS is 32°C→37.2°C)
(4) Pressure drop unit conversion (1 kPa=0.102 mAq)
(5) Max. working pressure of chilled water and cooling water is 784 kPa (8 kg/cm²G)
(6) QGW-10XFS and QGW-12XFS is dry shipment and LiBr solution shall be sent seperately with the absorption chiller. (Shipping method depends on the destination)
(7) Standard steam supply pressure is 784 kPa (8kg/cm²G)
(8) Fouling factor of chilled water and cooling water are in accordance with JIS B8622-2016.
(9) Chiller performance tolerance is in accordance with JIS B8622-2016.
(10) Above figures are subject to change without notice.

SCOPE OF ORDER

DOUBLE EFFECT STEAM FIRED MODEL

Item		Standard	Option
Standard		JIS B 8622	No option
Chilled water	Temperature	Inlet : 12°C Outlet : 7°C	Outlet : 5°C thru 12°C Temperature difference 3°C thru 10°C
	Flow rate	0.605 m^3/h·RT	Changes depending on chilled water temperature difference (min. 50%)
	Max. working pressure	0.784 MPa	1.0 MPaG / 1.6 MPaG
	Hydrostatic test pressure	Max. working press. x 1.5	No option
	Fouling factor	JIS (0.086 m^2K/kW)	Contact Panasonic
	Connecting flange	JIS	ANSI, DIN
	Material of tube	Copper tube	Contact Panasonic
	Water quality	Refer to JRA-GL02E-1994	No option
	Structure of water header	Removal type	Marine type
	Manufacturing standard of water header	Panasonic Standard	No option
Cooling water	Temperature	Inlet : 32°C Outlet : 37.3°C	Inlet : 20°C thru 33°C Temperature difference 3°C thru 10°C
	Flow rate	1.0 m^3/h·RT	Within the water flow rate range of each model
	Max. working pressure	0.784 MPa	1.0 MPaG / 1.6 MPaG
	Hydrostatic test pressure	Max. working press. x 1.5	No option
	Fouling factor	JIS (0.086 m^2K/kW)	Contact Panasonic
	Connecting flange	JIS	ANSI, DIN
	Material of tube	Copper tube	Contact Panasonic
	Water quality	Refer to JRA-GL02E-1994	No option
	Structure of water header	Marine type	No option
	Manufacturing standard of water header	Panasonic Standard	No option
Steam	Supply pressure at chiller header	784 kPaG	490 kPaG thru 882 kPaG
	Super heat	0 thru +10°C	Contact Panasonic
	Steam consumption	3.9 kg/h·RT	Changes depend on the specification
	Max. working pressure	1,000 kPaG	No option
	Hydrostatic test pressure	Max. working press. x 1.5	No option
	Material of tube	9/1 Copper nickel tube	Contact Panasonic
	Steam quality	Refer to JIS B 8223	No option
	Manufacturing standard of water header	Panasonic Standard	No option
Electricity	Phase Voltage Frequency	3 ø 380 V 50 Hz (Voltage regulation : within ±10%) (Frequency regulation : within ±5%)	3 ø 200-460 V 50·60 Hz (Voltage regulation : within ±10%) (Frequency regulation : within ±5%)
Thermal insulation		Insulation by purchaser	Cold surface
Shipment		1 section shipment (LiBr charged)	Contact Panasonic
Control	Safety functions	Chilled water freezing protection	Cooling water flow switch
		Chilled water flow switch	
		Cooling water temperature (load limitation)	
		Generator temperature	
		Generator pressure	
		Crystallization protection	
		Motor protection	
	Capacity control	Digital PID control by CHW temp	No option
		Remote control of CHW by 4-20 mA	No option
		Inverter control of #1 ABS pump	No option
	Parts	Selected by Panasonic	No option
Control panel	Painting	Munsell No. 5Y-7/1	No option
	Indication lamps	Operation : Green Stop : Orange Alarm : Red	No option
	Display	LED	No option
	External terminals (No-voltage normal open contact)	Operation indication	Contact Panasonic
		Stop indication	
		Alarm indication	
		Answer back indication	
		Cooling mode indication	
		Purge alarm indication	
	Installation condition	Indoor type	Outdoor type (Contact panasonic)
	BMS	-	LonWorks
	Parts	Selected by Panasonic	No option
Electrical wiring and piping		Wire : 600 V grade polyvinyl chloride-insulated wires	No option
		Pipe : plica tube (Flexible metal conduits)	No option
Installation condition	Installation condition	Indoor type	Outdoor type (Contact panasonic)
	Ambient temperature	5°C thru 40°C	No option
	Ambient humidity	Relative humidity : Max 90% at 45°C	No option
	Atmosphere	Be sure the following are not present *Corrosive gas *Explosive gas *Poisonous gas	Contact panasonic
Factory test		Leak test of vacuum side Electric insulation resistance test Dielectric breakdown test Function test of electric circuit	Performance test

TYPICAL PIPING DIAGRAM

In order to prevent freezing up of chilled water during dilute operation of the chiller,
continue the operation of the chilled water pumps and air-conditioner until the dilute operation will be completed (shortest 6 minutes).

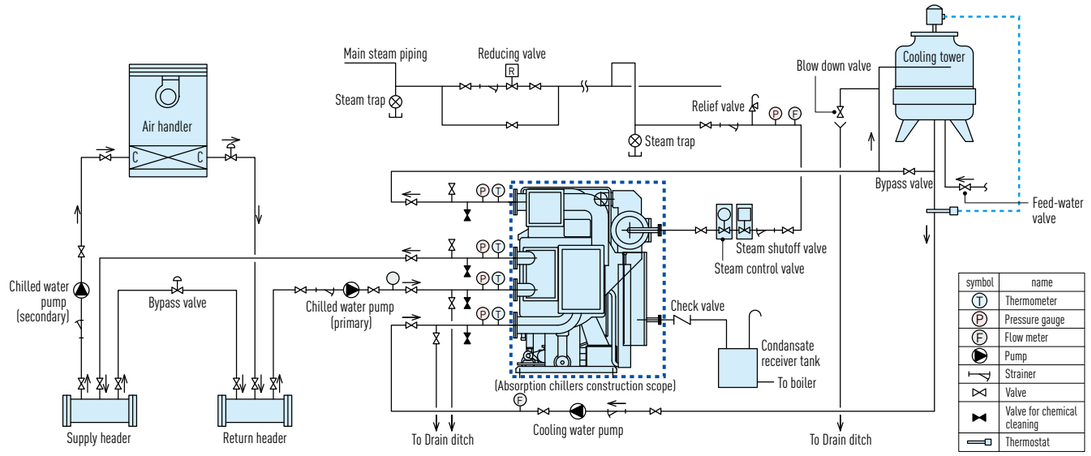

⚠ General remarks on piping

1. Out of dash line shall be purchaser's supply
2. Refer to the over all dimensions and specifications sheet for confirming nozzle location/size.
3. Cooling water flow rate should be constant in the range of 100-120% of the rated value. Chilled water flow rate shall not be less than 50% of the rated value. Otherwise chiller will run down by safety cutout of "Chilled water flow". To keep stable temperature of the leaving chilled water, fluctuation of the chilled water flow rate should be less or equal 20% per 10 minutes.
   In case of the secondary chilled water pump will be stopped and/or the air handler will be stopped before a dilution operation is completed, the retained water volume of the primary chilled water system should be more than 36 litter/RT. Otherwise, operate the chilled water pumps and air handling uint for 6 minutes during delution operation.
4. Location of chilled water pump, cooling water pump, expansion tank should be designed with static pressure and pump head in mind. Max. working pressure of chilled water and cooling water are indicated on the specification sheet.
5. Cooling water temperature should be controlled in accordance with "Cooling water temperature control".
6. Independent chilled water pump and cooling water pump should be provided to each chiller.
7. Quality management of cooling water is necessary. Poor water quality will cause a corrosion and/or scaling problem.
8. Install a 10 mesh strainer in each water pipe.
9. Provide a thermometer and a pressure gauge at the chilled and cooling water inlet and outlet.
10. Provide an air vent valve in each of the chilled and cooling water line at a point higher than the header.
11. Install drain valves at the lowest positions between absorption chiller and the stop valves of the chilled water and cooling water, and plumb them to the drain ditch.
12. Install stop valves between the absorption chiller and stop valves of all inlets and outlets for chemical cleaning of the water circuit system.
13. Please refer to this diagram to install 980 kPa of relief valve to ensure that the maximum pressure is not exceed Please install the relise port of the safety valve outdoors.
14. The standard vapor pressure is 784 kPa. If it exceeds 784 kPa, install a pressure reducing valve. Please install the release port of the safety valve outdoors.
15. Install a filter (100 mesh), drain water pipe and pressure gauge near the chiller steam inlet location. Without a strainer, it may cause control valve failure, steam leakage, or clogging of the heat exchanger.
16. The back pressure of the steam drain outlet pipe should be controlled below 49 kPa.
17. If there is a risk of steam and drain flowing back into the chiller during the chiller stop, install a check valve by the purchaser.
18. A steam trap has been installed in the chiller and does not need to be installed by the purchaser.
19. Stack/exhaust outlet should be located away from cooling tower.
20. The maximum steam drain temperature is 90°C.
21. If the steam superheat exceed 10 K, chiller performance would deteriorate.
22. When discharging the water in the chiller to prevent water freezing in winter, it has to be discharged from the valve which located at the bottom of the chiller pipe/header.

Hot Water Fired Absorption Chiller

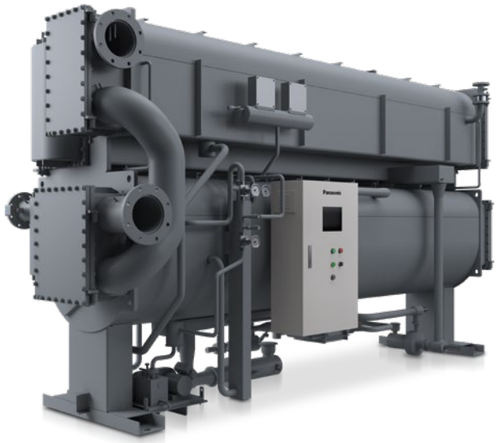

LJ series

Ideal for Combined Heat and Power (CHP) applications

Panasonic LJ single-effect hot water fired absorption chillers produce chilled water for comfort cooling or production processes using hot water (standard hot water temperature is 90°C) as a driving energy.
Panasonic LJ absorption chillers use water as refrigerant and Lithium Bromide solution as absorbent and use no CFCs or HCFCs. Also, since an absorption cycle is accomplished without a large motor-compressor drive arrangement, the customer can be assured of quiet and low-vibration operation. Panasonic LJ absorption chillers use hot water as a heat source, which is wasted in many factories and production processes and use very little electricity, so it can be an excellent solution for saving electricity bills and increase total efficiency of energy usage at the facility.
Panasonic LJ absorption chillers are widely used with cogeneration systems and also used with various kinds of waste heat from factories.

FEATURES : HOT WATER FIRED MODEL

Enhanced durability by Stainless steel generator tubes

Panasonic LJ single-effect hot water fired absorption chillers (except Cabin type model) uses stainless steel tubes (SUS436L) for the generator in order to achieve enhanced durability.

Falling film type generator

Falling film type generator is applied for Panasonic LJ single-effect hot water fired absorption chiller and it reduces amount of Lithium bromide solution and it resulted in quick start-up and quick response for load changes.

Touch screen

Panasonic LJ single-effect hot water fired absorption chiller is equipped with Touch screen for easy operation. (except Cabin type model)

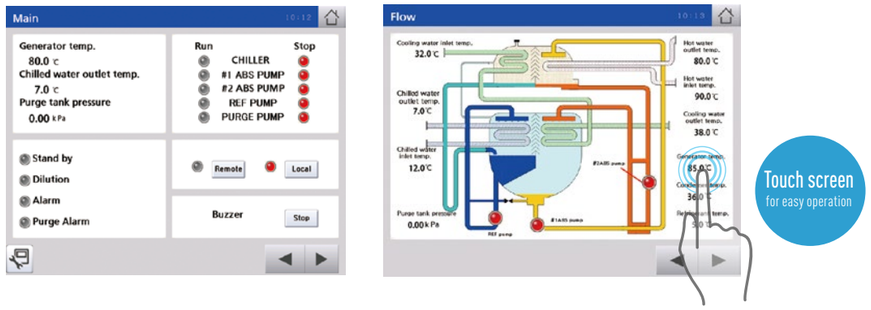

Cycle flow diagram

■ Hot Water Fired Absorption Chiller

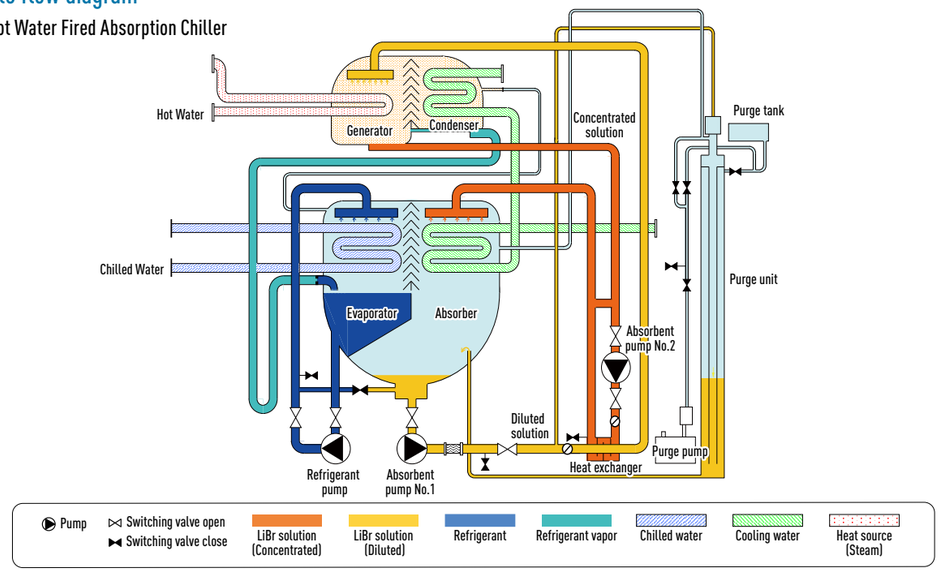

SPECIFICATION

HOT WATER FIRED ABSORPTION CHILLER LJ SERIES

				QA-***LJ				QB-***LJ	
			Model Name	75	90	110	135	155	180
Cooling capacity			kW	264	316	387	475	545	633
			USRT	75	90	110	135	155	180
Chilled water	Temperature (Inlet→Outlet)		°C	12→7°C					
	Flow rate		m³/h	45.4	54.4	66.5	81.6	93.7	109
	Pressure drop		kPa	72	78	48	53	47	50
	Connection		A	80		100		125	
Cooling water	Temperature (Inlet→Outlet)		°C	30→36.8°C					
	Flow rate		m³/h	76	91	112	137	157	183
	Pressure drop		kPa	64	66	74	82	76	80
	Connection		A	125				150	
Hot water	Temperature (Inlet→Outlet)		°C	90→80°C					
	Flow rate		m³/h	30.1	36.1	44.2	54.2	62.2	72.2
	Pressure drop		kPa	54	54	74	78	74	76
	Connection		A	80		100			
Power supply	Electric power supply			3 phase 380 V 50 Hz					
	Total electric current		A	8.2		9.1		9.6	
	Power capacirty (50/60Hz)		kVA	5.2		5.7		6.1	
Dimension	Length	(L)	mm	2,600	2,600	3,650	3,650	3,690	3,690
	Width	(W)	mm	1,400	1,400	1,400	1,400	1,500	1,500
	Height	(H)	mm	2,430	2,430	2,430	2,430	2,600	2,600
	Tube extracting space		mm	2,400	2,400	3,400	3,400	3,400	3,400
Weight	Operating weight		ton	4.1	4.3	5.2	5.6	6.9	7.3
	Total shipping weight		ton	3.4	3.5	4.4	4.6	5.7	5.9
Shipping method				1	1	1	1	1	1
Holding water amount	Chilled water		L	114	129	150	172	224	245
	Cooling water		L	378	418	478	538	679	742
	Hot water		L	198	221	255	290	376	410

QB-***LJ		QC-***LJ		QD-***LJ		QE-***LJ		
210	240	270	300	335	375	420	470	525
738	844	949	1,055	1,178	1,319	1,477	1,653	1,846
210	240	270	300	335	375	420	470	525
12→7°C								
127	145	163	181	203	227	254	284	318
101	105	50	52	45	42	97	47	62
125		150		200				
30→36.8°C								
213	244	274	304	340	381	426	477	533
85	86	91	93	94	96	105	86	113
200				250			300	
90→80°C								
84.2	96.3	109	121	135	151	169	189	211
71	71	96	97	97	98	88	37	49
125				150			200	
3 phase 380 V 50 Hz								
10.1				11.4		13.7	14.1	17.0
6.4				7.3		8.8	9.0	10.9
4,770	4,770	5,300	5,300	5,330	5,330	5,530	5,950	6,480
1,500	1,500	1,580	1,580	1,690	1,690	2,045	2,045	2,045
2,600	2,600	2,840	2,840	3,080	3,080	3,450	3,450	3,450
4,500	4,500	5,000	5,000	5,000	5,000	5,100	5,700	6,200
8.4	8.8	11.0	11.5	13.7	14.3	20.2	21.5	22.8
6.8	7.1	9.0	9.3	11.1	11.5	16.0	17.1	18.1
1	1	1	1	1	1	1	1	1
276	304	350	379	479	542	749	809	873
819	903	1,120	1,200	1,391	1,504	2,374	2,531	2,696
456	502	567	612	744	804	1,016	1,089	1,165

Note
(1) 1 USRT=3.52 kW (3024 kcal/h)
(2) Standard chilled water inlet and outlet temperature is 12°C→7°C. (Standard temperature differential is 5°C)
(3) Standard cooling water inlet and outlet temperature is 30°C→36.8°C.
(4) Pressure drop unit conversion (1 kPa=0.102 mAq)
(5) Standard Hot water inlet and outlet temperature is 90°C→80°C.
(6) Max. working pressure of chilled water and cooling water is 1034 kPaG (10.54 kg/cm²G)
(7) Fouling factor of chilled water and cooling water are in accordance with JIS B8622-2016.
(8) Chiller performance tolerance is in accordance with JIS B8622-2016.
(9) Above figures are subject to change without notice.

SCOPE OF ORDER

HOT WATER FIRED LJ SERIES

Item		Standard	Option
Standard		JIS B 8622	No option
Chilled water	Temperature	Inlet : 12°C Outlet : 7°C	Outlet : 5°C thru 12°C Temperature difference 3°C thru 10°C
	Flow rate	0.605 m^3/h·RT	Changes depending on chilled water temperature difference (min. 50%)
	Max. working pressure	1.0 MPaG	Max 2.0 MPaG
	Hydrostatic test pressure	Max. working press. x 1.5	No option
	Fouling factor	JIS (0.086 m^2K/kW)	Contact Panasonic
	Connecting flange	JIS	ANSI, DIN
	Material of tube	Copper tube	Contact Panasonic
	Water quality	Refer to JRA-GL02E-1994	No option
	Structure of water header	Removal type	Marine type
	Manufacturing standard of water header	Panasonic Standard	No option
Cooling water	Temperature	Inlet : 30.0°C Outlet : 36.8°C	Inlet : 20°C thru 40°C (There is a limit by the other conditions)
	Flow rate	1.016 m^3/h·RT	Within the water flow rate range of each model
	Max. working pressure	1.0 MPaG	Max 2.0 MPaG
	Hydrostatic test pressure	Max. working press. x 1.5	No option
	Fouling factor	JIS (0.086 m^2K/kW)	Contact Panasonic
	Connecting flange	JIS	ANSI, DIN
	Material of tube	Absorber : Copper Condenser : Stainless	Contact Panasonic
	Water quality	Refer to JRA-GL02E-1994	No option
	Structure of water header	Marine type	No option
	Manufacturing standard of water header	Panasonic Standard	No option
Hot water	Temperature	Inlet : 90°C Outlet : 80°C	Inlet Max 110°C
	Flow rate	0.401 m^3/h·RT	Within the water flow rate range of each model
	Max. working pressure	1.0 MPaG	Max 2.0 MPaG
	Hydrostatic test pressure	Max. working press. x 1.5	No option
	Fouling factor	JIS (0.086 m^2K/kW)	Contact Panasonic
	Connecting flange	JIS	ANSI, DIN
	Material of tube	Stainless	Contact Panasonic
	Hot water quality	Refer to JRA-GL02E-1994	No option
	Structure of water header	LJF11/63 : Removal type	Marine type
		LJF71/82 : Marine type	No option
	Manufacturing standard of water header	Panasonic Standard	No option
Electricity	Phase Voltage Frequency	3 ø 380 V 50 Hz (Voltage regulation : within ±10%) (Frequency regulation : within ±5%)	3 ø 200-460 V 50-60 Hz (Voltage regulation : within ±10%) (Frequency regulation : within ±5%)
Thermal insulation		Insulation by purchaser	Cold surface
Shipment		1 section shipment (LiBr charged)	Contact Panasonic
Control	Safety functions	Chilled water freezing protection	Cooling water flow switch
		Chilled water flow switvh	
		Cooling water temperature	
		Generator temperature	
		Generator pressure	
		Crystallization protection	
		Motor protection	
	Capacity control	Digital PID control by CHW temp	No option
		Remote control of CHW by 4-20mA	No option
	Parts	Selected by Panasonic	No option
Control panel	Painting	Munsell No. 5Y-7/1	No option
	Indication lamps	Operation : Green Stop : Orange Alarm : Red	No option
	Display	8.4 inch color display (Touch panel)	No option
	External terminals (No-voltage normal open contact)	Operation indication	Contact Panasonic
		Stop indication	
		Alarm indication	
		Answer back indication	
		Cooling mode indication	
		Purge alarm indication	
	BMS	Modbus	BACnet
	Installation condition	Indoor type	Outdoor type (Contact panasonic)
	Parts	Selected by Panasonic	No option
Electrical wiring and piping		Wire : 600V grade polyvinyl chloride-insulated wires	No option
		Pipe : plica tube (Flexible metal conduits)	No option
Installation condition	Installation condition	Indoor type	Outdoor type (Contact panasonic)
	Ambient temperature	5°C thru 40°C	No option
	Ambient humidity	Relative humidity : Max 90% at 45°C	No option
	Atmosphere	Be sure the following are not present *Corrosive gas *Explosive gas *Poisonous gas	Contact panasonic
Factory test		Leak test of vacuum side Electric insulation resistance test Dielectric breakdown test Function test of electric circuit	Performance test

Hot Water Fired Absorption Chiller (Cabin type)

LJ series (Cabin type)

Ideal for Combined Heat and Power (CHP) applications

Panasonic LJ (cabin type) single effect hot water fired absorption chiller uses waste hot water as a heat source and produce chilled water effectively.
Panasonic LJ (cabin type) single effect hot water fired absorption chillers are available in three models with different cooling capacities.
The unit is factory insulated and easy to install.
Panasonic LJ (cabin type) single effect hot water fired absorption chiller is ideal for combination with a small CHP system.

SPECIFICATION

HOT WATER FIRED ABSORPTION CHILLER LJ SERIES (Cabin type)

			QP-***LJ		
Model Name			25	40	50
Cooling capacity		kW	88	140	176
		USRT	25	40	50
Chilled water	Temperature (Inlet→Outlet)	°C	12→ 7°C		
	Flow rate	m^3/h	15.1	24.2	30.2
	Pressure drop	kPa	99	83	81
	Connection diameter (JIS)	A	50	65	
Cooling water	Temperature (Inlet→Outlet)	°C	30→35.7°C		
	Flow rate	m^3/h	31.9	51.0	63.8
	Pressure drop	kPa	59	43	38
	Connection diameter (JIS)	A	80	100	
Hot water	Temperature (Inlet→Outlet)	°C	90→80°C		
	Flow rate	m^3/h	11.0	17.6	22.0
	Pressure drop	kPa	52	31	36
	Connection diameter (JIS)	A	50	65	
Power supply	Electric power supply		3 phase 380 V 50 Hz		
	Total electric current	A	5.6		
	Power capacirty (50/60Hz)	kVA	3.4		
Dimension	Length (L)	mm	1,745	2,450	
	Width (W)	mm	1,255		1,435
	Height (H)	mm	2,115		
	Tube extracting space	mm	900	1,350	
Weight	Operating weight	ton	2.07	2.68	3.15
	Total shipping weight	ton	1.82	2.38	2.72
Shipping method			1		
Holding water amount	Chilled water	L	70	90	120
	Cooling water	L	134	183	242
	Hot water	L	44	54	69

Note
(1) 1 USRT=3.52 kW (3024 kcal/h)
(2) Standard chilled water inlet and outlet temperature is 12°C→7°C. (Standard temperature differential is 5°C)
(3) Standard cooling water inlet and outlet temperature is 30°C→35.7°C.
(4) Pressure drop unit conversion (1 kPa=0.102 mAq)
(5) Standard Hot water inlet and outlet temperature is 90°C→80°C.
(6) Max. working pressure of chilled water and cooling water is 784 kPa (8 kg/cm^2G)
(7) Fouling factor of chilled water and cooling water are in accordance with JIS B8622-2016.
(8) Chiller performance tolerance is in accordance with JIS B8622-2016.
(9) Above figures are subject to change without notice.

SCOPE OF ORDER

HOT WATER FIRED LJ SERIES (Cabin type)

Item		Standard	Option
Standard		JIS B 8622	No option
Chilled water	Temperature	Inlet : 12°C Outlet : 7°C	Outlet : 5°C thru 12°C Temperature difference 3°C thru 10°C
	Flow rate	0.605 m^3/h·RT	Changes depending on chilled water temperature difference (min. 50%)
	Max. working pressure	0.784 MPa	No option
	Hydrostatic test pressure	Max. working press. x 1.5	No option
	Fouling factor	JIS (0.086 m^2K/kW)	Contact Panasonic
	Connecting flange	JIS	ANSI, DIN
	Material of tube	Copper tube	Contact Panasonic
	Water quality	Refer to JRA-GL02E-1994	No option
	Structure of water header	Welded type	No option
	Manufacturing standard of water header	Panasonic Standard	No option
Cooling water	Temperature	Inlet : 30°C Outlet : 35.7°C	Inlet : 20°C thru 40°C (There is a limit by the other conditions)
	Flow rate	1.275 m^3/h·RT	Within the water flow rate range of each model
	Max. working pressure	0.784 MPa	No option
	Hydrostatic test pressure	Max. working press. x 1.5	No option
	Fouling factor	JIS (0.086 m^2K/kW)	Contact Panasonic
	Connecting flange	JIS	ANSI, DIN
	Material of tube	Copper tube	Contact Panasonic
	Water quality	Refer to JRA-GL02E-1994	No option
	Structure of water header	Marine type	No option
	Manufacturing standard of water header	Panasonic Standard	No option
Hot water	Temperature	Inlet : 90°C Outlet : 80°C	Inlet Max 110°C Outlet Min. 70°C
	Flow rate	0.44 m^3/h·RT	Within the water flow rate range of each model
	Max. working pressure	0.784 MPa	No option
	Hydrostatic test pressure	Max. working press. x 1.5	No option
	Fouling factor	JIS (0.086 m^2K/kW)	Contact Panasonic
	Connecting flange	JIS	ANSI, DIN
	Material of tube	Copper tube	Contact Panasonic
	Hot water quality	Refer to JRA-GL02E-1994	No option
	Structure of water header	Marine type	No option
	Manufacturing standard of water header	Panasonic Standard	No option
Electricity	Phase Voltage Frequency	3 ø 380 V 50 Hz (Voltage regulation : within ±10%) (Frequency regulation : within ±5%)	3 ø 200-460 V 50·60 Hz (Voltage regulation : within ±10%) (Frequency regulation : within ±5%)
Thermal insulation		Insulation by purchaser	Cold surface
Shipment		1 section shipment (LiBr charged)	Contact Panasonic
Control	Safety functions	Chilled water freezing protection	Cooling water flow switch
		Chilled water flow switvh	
		Cooling water temperature	
		Generator temperature	
		Generator pressure	
		Crystallization protection	
		Motor protection	
	Capacity control	Digital PID control by CHW temp	No option
		Remote control of CHW by 4-20 mA	No option
	Parts	Selected by Panasonic	No option
Control panel	Painting	Munsell No. 5Y-7/1	No option
	Indication lamps	Operation : Green Stop : Orange Alarm : Red	No option
	Display	LED	No option
	External terminals (No-voltage normal open contact)	Operation indication	Contact Panasonic
		Stop indication	
		Alarm indication	
		Answer back indication	
		Cooling mode indication	
		Purge alarm indication	
	BMS	-	No option
	Installation condition	Indoor type	Outdoor type (Contact panasonic)
	Parts	Selected by Panasonic	No option
Exterior panel painting		Munsell No. 1Y-8.5/0.5	No option
Electrical wiring and piping		Wire : 600V grade polyvinyl chloride-insulated wires	No option
		Pipe : plica tube (Flexible metal conduits)	No option
Installation condition	Installation condition	Indoor type	Outdoor type (Contact panasonic)
	Ambient temperature	5°C thru 40°C	No option
	Ambient humidity	Relative humidity : Max 90% at 45°C	No option
	Atmosphere	Be sure the following are not present *Corrosive gas *Explosive gas *Poisonous gas	Contact panasonic
Factory test		Leak test of vacuum side Electric insulation resistance test Dielectric breakdown test Function test of electric circuit	Performance test

TYPICAL PIPING DIAGRAM

In order to prevent freezing up of chilled water during dilute operation of the chiller,
continue the operation of the chilled water pumps and air-conditioner until the dilute operation will be completed (shortest 6 minutes).

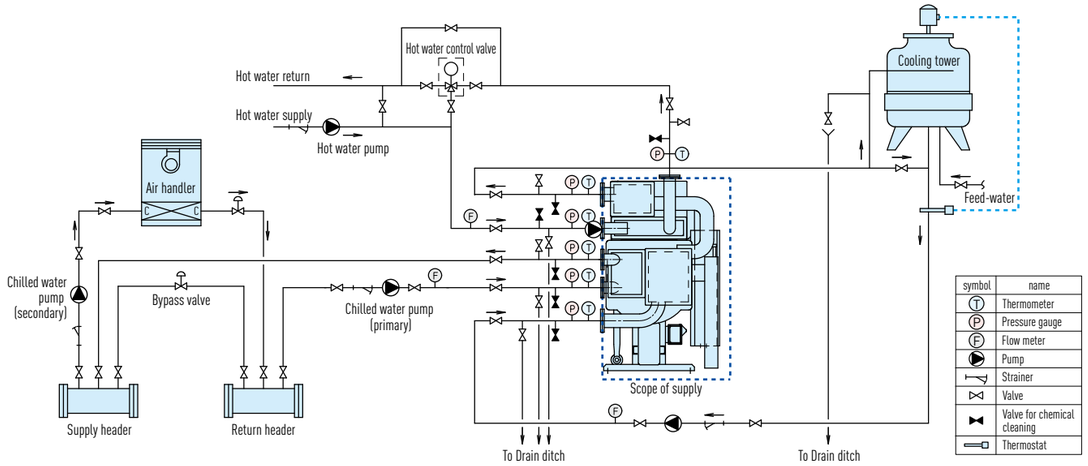

General remarks on piping

1. Equipment and parts outside the area surrounded by the broken line are not supplied by Panasonic.
2. For pipe connections and diameter, refer to the dimensional drawings and specification tables.
3. Cooling water flow should be constant in the range of 100 - 120% of the rated value. Chilled water flow rate shall not be less than 50% of the rated value, otherwise the chiller will stop. Please secure the chilled water's retention volume at least 11 liter / kW.
4. Position the chilled water pump, cooling water pump, hot water pump and expansion tank correctly so that the chiller pressure does not exceed the set value.
5. For cooling water temperature control refer to the drawing "Cooling water temperature control method".
6. Separate chilled, cooling and hot water pumps should be provided for each chiller.
7. Provide a cooling water blow-down valve in the cooling tower inlet for water quality control.
8. Install a filter in the chilled water, cooling water and hot water pipes (10 mesh).
9. Install stop valves on the chilled, cooling and hot water inlet and outlet.
10. Provide a thermometer and a pressure gauge at the chilled, cooling and hot water inlet and outlet.
11. Provide an air vent valve in each of the chilled, cooling and hot water line at a point higher than the header.
12. Install drain valves at the lowest positions between absorption chiller and the stop valves of the chilled water, cooling water and hot water, and plumb them to the drain ditch.
13. Install stop valves between the absorption chiller and stop valves of all inlets and outlets for chemical cleaning of the water circuit system.
14. Install a cooling tower away from any exhaust gas outlet.
15. When discharging the water in the chiller to prevent water freezing in winter, discharge the water not only from the water boxes, but also from the valves located at the lowest points of each water system.

Single Effect Steam Fired Absorption Chiller

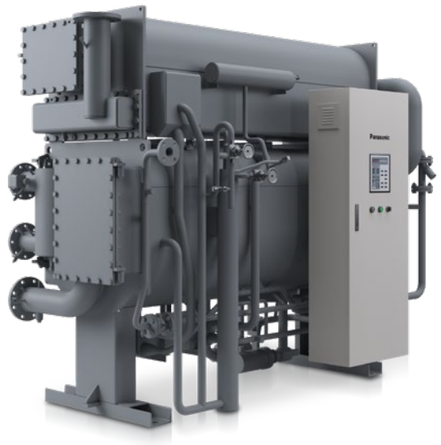

TJ series

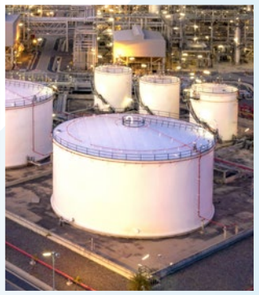

Utilizes waste heat as a driving energy and increases total energy efficiency

Panasonic TJ single-effect low pressure steam fired absorption chillers produce chilled water for comfort cooling or production processes using low pressure steam (standard pressure is 1.0 kg/cm^{2}G) as driving energy. Panasonic TJ absorption chillers use water as refrigerant and Lithium Bromide solution as absorbent and use no CFCs or HCFCs. Also, since an absorption cycle is accomplished without a large motor-compressor drive arrangement, the customer can be assured of quiet and low-vibration operation. Panasonic TJ absorption chillers use low pressure steam as a heat source, which is wasted in many factories and production processes and use very little electricity, so it can be an excellent solution not only for saving electricity bills for air-conditioning but also for increasing total efficiency of energy usage at the facility. Panasonic TJ absorption chillers are widely used in various industries like foods and beverages, pulp and paper, Petrochemical and so on.

SPECIFICATION

SINGLE EFFECT STEAM FIRED ABSORPTION CHILLER TJ SERIES

				QA-***TJ				QB-***TJ	
			Model Name	100	120	150	180	210	240
Cooling capacity			kW	352	422	527	633	738	844
			USRT	100	120	150	180	210	240
Chilled water	Temperature (Inlet→Outlet)		°C	12→7°C					
	Flow rate		m³/h	60.5	72.6	90.8	109	127	145
	Pressure drop		kPa	31	33	35	40	82	85
	Connection diameter (JIS)		A	100				125	
Cooling water	Temperature (Inlet→Outlet)		°C	32→39.1°C					
	Flow rate		m³/h	103	124	155	186	217	248
	Pressure drop		kPa	53	57	49	57	50	55
	Connection diameter (JIS)		A	125				150	
Steam	Steam supply pressure		kPaG	Saturated steam 100 kPa (Max working pressure 150 kPa)					
	Steam consumption		kg/h	780	940	1,170	1,410	1,640	1,880
	Connection diameter (JIS)	Steam inlet	A	125				150	
		Drain outlet	A	40					
Power supply	Electric power supply			3 phase 380 V 50 Hz					
	Total electric current		A	7.1		8.0		9.3	
	Power capacirty (50/60Hz)		kVA	4.4		5.0		5.9	
Dimension	Length (L)		mm	2,690	2,690	3,690	3,690	3,790	3,790
	Width (W)		mm	1,400	1,400	1,400	1,400	1,560	1,560
	Height (H)		mm	2,200	2,200	2,200	2,200	2,350	2,350
	Tube extracting space		mm	2,400	2,400	3,400	3,400	3,400	3,400
Weight	Operating weight		ton	4.0	4.3	5.1	5.4	6.7	6.9
	Total shipping weight		ton	3.5	3.7	4.5	4.7	5.8	6.0
Shipping method				1	1	1	1	1	1
Holding water amount		Chilled water	L	120	130	150	170	220	250
		Cooling water	L	330	370	410	450	580	630

QB-***TJ		QC-***TJ		QD-***TJ		QE-***TJ		
280	320	360	400	450	500	560	630	700
985	1,125	1,266	1,407	1,582	1,758	1,969	2,215	2,461
280	320	360	400	450	500	560	630	700
12→7°C								
169	194	218	242	272	303	339	381	424
58	61	65	68	56	54	48	64	84
150				200				
32→39.1°C								
290	331	372	414	465	517	582	655	727
101	109	85	88	77	96	53	71	93
200				250		300		
Saturated steam 100 kPa (Max working pressure 150 kPa)								
2,190	2,500	2,810	3,120	3,510	3,900	4,370	4,920	5,460
200						250		
40		50		65				
3 phase 380 V 50 Hz								
9.8							10.2	
6.2							6.5	
4,850	4,850	4,940	4,940	4,990	4,990	5,060	5,600	6,100
1,560	1,560	1,630	1,630	1,700	1,700	1,990	1,990	1,990
2,370	2,370	2,610	2,610	2,860	2,860	3,210	3,210	3,210
4,500	4,500	4,500	4,500	4,500	4,500	4,600	5,200	5,700
7.9	8.3	10.3	10.6	12.5	12.8	17.5	18.9	20.2
6.9	7.2	8.9	9.1	10.7	10.9	14.8	16.0	17.1
1	1	1	1	1	1	1	1	1
290	310	350	380	490	560	700	770	830
690	760	980	1,050	1,310	1,410	1,980	2,130	2,280

Note
(1) 1 USRT=3.52 kW (3024 kcal/h)
(2) Standard chilled water inlet and outlet temperature is 12°C→7°C. (Standard temperature differential is 5°C)
(3) Standard cooling water inlet and outlet temperature is 32°C→39.1°C.
(4) Pressure drop unit conversion (1 kPa=0.102 mAq)
(5) Max. working pressure of chilled water and cooling water is 1034 kPaG (10.54 kg/cm²G)
(6) Standard steam supply pressure is 100 kPa (1.02kg/cm²G)
(7) Max. working pressure of steam supply is 150 kPaG (1.53 kg/cm²G)
(8) Fouling factor of chilled water and cooling water are in accordance with JIS B8622-2016.
(9) Chiller performance tolerance is in accordance with JIS B8622-2016.
(10) Above figures are subject to change without notice.

SCOPE OF ORDER

SINGLE EFFECT STEAM FIRED MODEL

Item		Standard	Option
Standard		JIS B 8622	No option
Chilled water	Temperature	Inlet : 12°C Outlet : 7°C	Outlet : 5°C thru 12°C Temperature difference 3°C thru 10°C
	Flow rate	0.605 m^3/h·RT	Changes depending on chilled water temperature difference (min. 50%)
	Max. working pressure	1.0 MPaG	Max 2.0 MPaG
	Hydrostatic test pressure	Max. working press. x 1.5	No option
	Fouling factor	JIS (0.086 m^2K/kW)	Contact Panasonic
	Connecting flange	JIS	ANSI, DIN
	Material of tube	Copper tube	Contact Panasonic
	Water quality	Refer to JRA-GL02E-1994	No option
	Structure of water header	Removal type	Marine type
	Manufacturing standard of water header	Panasonic Standard	No option
Cooling water	Temperature	Inlet : 32°C Outlet : 39.1°C	Inlet : 20°C thru 40 °C (There is a limit by the other conditions)
	Flow rate	1.03 m^3/h·RT	Within the water flow rate range of each model
	Max. working pressure	1.0 MPaG	Max 2.0 MPaG
	Hydrostatic test pressure	Max. working press. x 1.5	No option
	Fouling factor	JIS (0.086 m^2K/kW)	Contact Panasonic
	Connecting flange	JIS	ANSI, DIN
	Material of tube	Copper tube	Contact Panasonic
	Water quality	Refer to JRA-GL02E-1994	No option
	Structure of water header	Marine type	No option
	Manufacturing standard of water header	Panasonic Standard	No option
Steam	Supply pressure at chiller header	100 kPaG	50 kPaG thru 150 kPaG
	Super heat	0 thru + 10 °C	Max +55 K
	Steam consumption	7.8 kg/h·RT	Changes depend on the specification
	Max. working pressure	150 kPaG	No option
	Hydrostatic test pressure	Max. working press. x 1.5	No option
	Material of tube	9/1 Copper nickel tube	Contact Panasonic
	Steam quality	Refer to JIS B 8223	No option
	Manufacturing standard of water header	Panasonic Standard	No option
Electricity	Phase Voltage Frequency	3ø 380V 50Hz (Voltage regulation : within ±10%) (Frequency regulation : within ±5%)	3ø 200-460V 50·60Hz (Voltage regulation : within ±10%) (Frequency regulation : within ±5%)
Thermal insulation		Insulation by purchaser	Cold surface
Shipment		1 section shipment (LiBr charged)	Contact Panasonic
Control	Safety functions	Chilled water freezing protection	Cooling water flow switch
		Chilled water flow switch	
		Cooling water temperature	
		Generator temperature	
		Generator pressure	
		Crystallization protection	
		Motor protection	
	Capacity control	Digital PID control by CHW temp	No option
		Remote control of CHW by 4-20mA	No option
	Parts	Selected by Panasonic	No option
Control panel	Painting	Munsell No. 5Y-7/1	No option
	Indication lamps	Operation : Green Stop : Orange Alarm : Red	No option
	Display	LED	No option
	External terminals (No-voltage normal open contact)	Operation indication	Contact Panasonic
		Stop indication	
		Alarm indication	
		Answer back indication	
		Cooling mode indication	
		Purge alarm indication	
	BMS	-	LonWorks
	Installation condition	Indoor type	Outdoor type (Contact panasonic)
	Parts	Selected by Panasonic	No option
Electrical wiring and piping		Wire : 600V grade polyvinyl chloride-insulated wires	No option
		Pipe : plica tube (Flexible metal conduits)	No option
Installation condition	Installation condition	Indoor type	Outdoor type (Contact panasonic)
	Ambient temperature	5°C thru 40°C	No option
	Ambient humidity	Relative humidity : Max 90% at 45°C	No option
	Atmosphere	Be sure the following are not present *Corrosive gas *Explosive gas *Poisonous gas	Contact panasonic
Factory test		Leak test of vacuum side Electric insulation resistance test Dielectric breakdown test Function test of electric circuit	Performance test

TYPICAL PIPING DIAGRAM

In order to prevent freezing up of chilled water during dilute operation of the chiller,
continue the operation of the chilled water pumps and air-conditioner until the dilute operation will be completed (shortest 6 minutes).

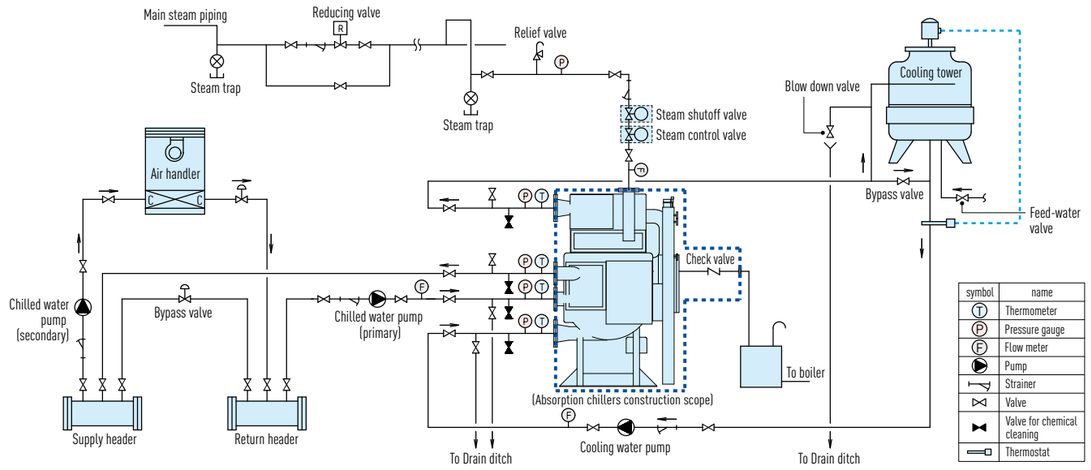

General remarks on piping

1. Out of dash line shall be purchaser's supply.
2. Refer to the over all dimensions and specifications sheet for confirming nozzle location/size.
3. Cooling water flow rate should be constant in the range of 100-120% of the rated value. Chilled water flow rate shall not be less than 50% of the rated value. Otherwise chiller will run down by safety cutout of "Chilled water flow". To keep stable temperature of the leaving chilled water, fluctuation of the chilled water flow rate should be less or equal 20% per 10 minutes.
   In case of the secondary chilled water pump will be stopped and/or the air handler will be stopped before a dilution operation is completed, the retained water volume of the primary chilled water system should be more than 36 litter/RT. Otherwise, operate the chilled water pumps and air handling uint for 6 minutes during delution operation.
4. Location of chilled water pump, cooling water pump, expansion tank should be designed with static pressure and pump head in mind. Max. working pressure of chilled water and cooling water are indicated on the specification sheet.
5. Cooling water temperature should be controlled in accordance with "Cooling water temperature control".
6. Independent chilled water pump and cooling water pump should be provided to each chiller.
7. Quality management of cooling water is necessary. Poor water quality will cause a corrosion and/or scaling problem.
8. Install a 10 mesh strainer in each water pipe.
9. Provide a thermometer and a pressure gauge at the chilled and cooling water inlet and outlet.
10. Provide an air vent valve in each of the chilled and cooling water line at a point higher than the header.
11. Install drain valves at the lowest positions between absorption chiller and the stop valves of the chilled water and cooling water, and plumb them to the drain ditch.
12. Install stop valves between the absorption chiller and stop valves of all inlets and outlets for chemical cleaning of the water circuit system.
13. Please refer to this diagram to install 196 kPa of relief valve to ensure that the maximum pressure is not exceed Please install the relise port of the safety valve outdoors.
14. If the steam superheat exceed 5 K, chiller performance would deteriorate.
15. Install a filter (100 mesh), drain water pipe and pressure gauge near the chiller steam inlet location. Without a strainer, it may cause control valve failure, steam leakage, or clogging of the heat exchanger.
16. The back pressure of the steam drain outlet pipe should be controlled below 49 kPa.
17. If there is a risk of steam and drain flowing back into the chiller during the chiller stop, install a check valve by the purchaser.
18. A steam trap has been installed in the chiller and does not need to be installed by the purchaser.
19. Stack/exhaust outlet should be located away from cooling tower.
20. The maximum steam drain temperature is 90°C.
21. When discharging the water in the chiller to prevent water freezing in winter, it has to be discharged from the valve which located at the bottom of the chiller pipe/header.

SCOPE OF SUPPLY

ALL MODELS

Item	Supplied by Panasonic	Supplied by Purchaser	Remark
1.Transportation			
To destination port	Depends on contract		FOB, CIF, etc.
From unloading port to customer's site	Depends on contract		
Unloading from the trailer or truck		○	
Installation and leveling of chiller		○	
1.Equipment			
Absorption chiller unit	○		(a) Main body : Evaporator, Absorber, Condenser, Generator(s), Heat exchangers (b) Absorbent pump(s), Refrigerant pump (c) Purge unit (d) Capacity control device (e) Control box (f) Safety device (g) Absorbent, Refrigerant (h) Internal connecting pipe and wiring
Painting	○		[Chiller main body] Panasonic scope of supply is up to anti-corrosive primary coating for chiller main unit. Finish coating is not inplemented. [Control panel] Finish coating paint color is Munsell No. 5Y-7/1 (Semigloss)
Insulation for the chiller		○	Cold surface (option) and Hot surface insulation shall be done as per Panasonic's instruction.
Steam/Hot water control valve installation		○	Hot water control valve (LJ series) Steam control valve and steam shut off valve (F series, TJ series) Control valves (steam/hot water) and shut off valve (steam) are sent separately with the chiller main unit. Install the control valve on the piping and wire connect with chiller control panel.
Accessories	○		(a) Purge pump oil (b) Foundation bolt washers (c) Matching flanges, gaskets, anchor bolts and nuts (d) instructions (It depends on the optional specifications.)
2.Test			
Factory test	○		Hydrostatic pressure test of water headers. Leak test of vacuum side. Function test of electric circuit and safety devices Performance test (option)
Chiller start up and commissioning at site	○		Testing and adjustment at site including operation instructions to users.
3.Installation			
Installation of unit		○	
Preparation for work	○		Evacuation of N_2 gas. Absorbent and refrigerant charge. (In case of dry shipment)
Chiller assembling		○	Burner assembling work in case the burner is sent seperately. Chiller assembling and welding work in case of split shipment.
4.Electrical work			
Power supply to the chiller control panel		○	3 phase 380V/AC etc. including earthing.
External electric allocation		○	Wire to the terminal inside the control panel as per Panasonic's instruction. BMS communication protocol (option) shall be discussed before ordering.
Cooling water temperature control device		○	Install and wire the thermostat to control the bypass valve. See "Cooling water management" in page 39.
Other work			
Foundation construction		○	Base plates, washers, anchor bolts and nuts are provided by Panasonic. Washers are recommended to be welded to the base as per Panasonic's instruction.
External piping work		○	including piping insulation.
Water quality management		○	Water quality shall be managed based on JRA9001 to maintain the performance of absorption chiller.
Electricity and water during assembling		○	Assembling engineers should be able to use necessary utilities during assembling without limitation.
Electricity and other utilities during commissioning		○	Commissioning engineers should be able to use necessary utilities during commissioning without limitation.
Lithium bromide solution and refrigerant	○		Charged inside absorption chiller. In case of multiple piece shipment, sent separately with the chiller unit and charged by Panasonic commissioning engineer at site.
Disposal of packing materials		○	
After-sales service		○	Maintenance service after warranty period will be provided by Panasonic engineers according to a contract with the customer.

Absorption chiller (/heater) includes ;
1. Absorption chiller (/heater) main body
(a) Machine of refrigeration cycle including Evaporator, Absorber, Generator (High temperature generator and Low temperature generator for F series and CP, R type), Heat exchangers etc.
(b) Purge device
(c) Capacity control device
(d) Burner (CP type, R type)
(e) Steam control valve (F series and TJ series)
(f) Steam shut off valve (F series and TJ series)
(g) Hot water control valve (LJ series)
(h) Safety devices
(i) Control panel
(j) Absorbent and refrigerant
(k) Internal piping and internal electric wiring

2. Accessories
(a) Foundation bolts, nuts and washers 1 set
(b) Instruction manual 1 set

COOLING WATER MANAGEMENT

Cooling water temperature control

Cooling water inlet temperature should not go down more than 13K below the design temperature (except when chiller starts operation).
In case the design temperature is 32°C, cooling water inlet temperature should not be lower than 19°C.

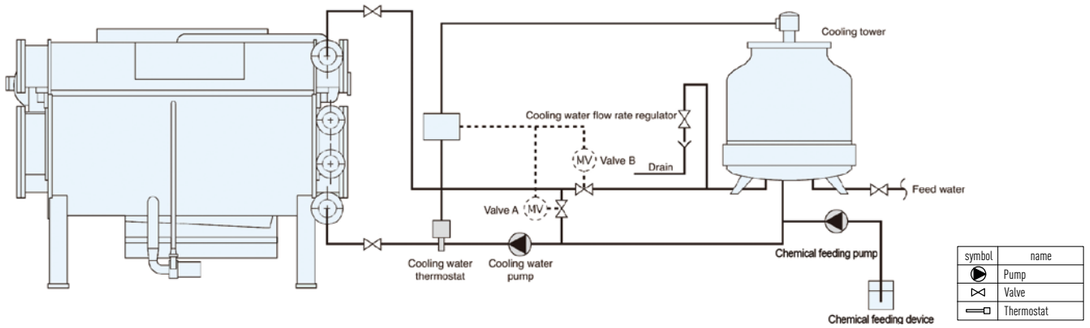

1. Monitor the cooling water temperature with a thermostat and control the cooling tower fan.
2. Install electric type Two-way valve A and B (Three-way valve can also be used), and keep the cooling water temperature at 19°C or higher.
   (For Example: Close valve B and open valve A, when cooling water supply temperature is 22°C. Close valve A and open valve B when cooling water supply temperature is 25°C.)

Cooling water quality control

- Moisture in the cooling water is vaporized and dispersed into the atmosphere when flowing through the cooling tower. Therefore, cooling water that circulates in open type system will continuously be concentrated and deteriorated.
- If the cooling water quality becomes bad, scale and slime accumulation will arise, and the chiller unit will be troubled with capacity deterioration and heat transfer tube corrosion.
- Please install cooling water overflow device and implement water treatment appropriately, to supervise the water quality and to keep within the allowable range.
- Water quality standard for water used in air conditioners and chillers are formulated by The Japan Refrigeration and Air Conditioning Industry Association. For details please refer to following table (JRA-GL-02-1994).

Cooling water quality standard

Item		Recirculating type		Once through type	Tendency	
		Recirculating water	Make-up water	Once through water	Corrosive	Scale-forming
Standard items	pH (25°C)	6.5 ~ 8.2	6.0 ~ 8.0	6.8 ~ 8.0	○	○
	Electrical conductivity (25°C) (mS/m)	80 or less	30 or less	40 or less	○	○
	Electrical conductivity (25°C) (μS/cm)	800 or less	300 or less	400 or less	○	○
	Chloride ion ($MgCl^-$/L)	200 or less	50 or less	50 or less	○	
	Sulfate ion ($MgSO_4^{2-}$/L)	200 or less	50 or less	50 or less	○	
	Acid consumption (pH4.8) ($MgCaCO_3$/L)	100 or less	50 or less	50 or less		○
	Total hardness ($MgCaCO_3$/L)	200 or less	70 or less	70 or less		○
	Calcium hardness ($MgCaCO_3$/L)	150 or less	50 or less	50 or less		○
	Ionic silica ($MgSiO_2$/L)	50 or less	30 or less	30 or less		○
Reference items	Iron (MgFe/L)	1.0 or less	0.3 or less	1.0 or less	○	○
	Copper (MgCu/L)	0.3 or less	0.1 or less	1.0 or less	○	
	Sulfide ion (MgS^{2-}/L)	Not to be detected	Not to be detected	Not to be detected	○	
	Ammonium ion ($MgNH_4^+$/L)	1.0 or less	0.1 or less	1.0 or less	○	