Panasonic

Operating Instructions

Digital Cordless Answering System

Model No. **KX-TG6721AL**
KX-TG6722AL

DECT 6.0

Model shown is KX-TG6721.

Before initial use, see "Getting Started" on page 9.

Thank you for purchasing a Panasonic product.

Please read these operating instructions before using the unit and save them for future reference.

Please access our online customer survey:
http://panasonic.net/pcc/tel/q

Table of Contents

Introduction
Model composition 3
Accessory information 3

Important Information
For your safety 5
Important safety instructions 6
For best performance 6
Other information 7
Specifications 7

Getting Started
Setting up 9
Note when setting up 10
Controls 11
Display 12
Turning the power on/off 13
Initial settings 13
Smart function key (Top Key) 14
One touch eco mode 15
Wall mounting 15

Making/Answering Calls
Making calls 17
Answering calls 17
Useful features during a call 18
Key lock 18
Power back-up operation 19

Phonebook
Handset phonebook 21
Copying phonebook entries 22

Programming
Programmable settings 23
Special programming 27
Registering a unit 30

Caller ID Service
Using Caller ID service 32
Caller list 32

Answering System
Answering system 34
Turning the answering system on/off 34
Greeting message 34
Listening to messages using the base unit 35
Listening to messages using the handset 35
Remote operation 36
Answering system settings 37

Voice Mail Service
Voice mail service 39

Intercom/Locator
Intercom 40
Handset locator 40
Transferring calls, conference calls 40

Useful Information
Character entry 41
Error messages 43
Troubleshooting 44

Index
Index.....48

TG672xAL(en)_0125_ver011.pdf 2 2012/01/25 9:16:14

Model composition

Series	Model No.	Base unit	Handset	
		Part No.	Part No.	Quantity
KX-TG6721 series	KX-TG6721*1	KX-TG6721	KX-TGA671	1
	KX-TG6722	KX-TG6721	KX-TGA671	2

*1 Feature differences: Intercom calls can be made between handsets by purchasing and registering one or more optional handsets (page 4).

- The suffix (AL) in the following model numbers will be omitted in these instructions: KX-TG6721AL/KX-TG6722AL

Accessory information

Supplied accessories

No.	Accessory item/Part number	Quantity	
		KX-TG6721	KX-TG6722
①	AC adaptor/PNLV226AL	1	2
②	Telephone line cord*1	1	1
③	Rechargeable batteries*2	2	4
④	Handset cover*3	1	2
⑤	Charger	–	1

*1 The telephone line cord comes connected with the telephone plug.
*2 See page 4 for replacement battery information.
*3 The handset cover comes attached to the handset.

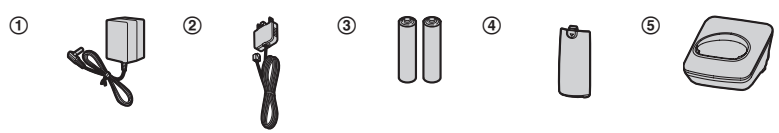

TG672xAL(en)_0125_ver011.pdf 3 2012/01/25 9:16:14

Additional/replacement accessories

Please contact your nearest Panasonic dealer for sales information.

Accessory item	Model number
Rechargeable batteries	HHR-4MVT/2B or HHR-4MRT/2B*1
	Battery type: – Nickel metal hydride (Ni-MH) – 2 x AAA (R03) size for each handset
DECT repeater	KX-A405AL

*1 Replacement batteries may have a different capacity from that of the supplied batteries.

Expanding your phone system

Handset (optional): KX-TGA671AZ	
You can expand your phone system by registering optional handsets (6 max.) to a single base unit. ● Optional handsets may be a different colour from that of the supplied handsets.	

TG672xAL(en)_0125_ver011.pdf 4 2012/01/25 9:16:14

For your safety

To prevent severe injury and loss of life/ property, read this section carefully before using the product to ensure proper and safe operation of your product.

WARNING

Power connection

- Use only the power source marked on the product.
- Do not overload power outlets and extension cords. This can result in the risk of fire or electric shock.
- Completely insert the AC adaptor/power plug into the power outlet. Failure to do so may cause electric shock and/or excessive heat resulting in a fire.
- Regularly remove any dust, etc. from the AC adaptor/power plug by pulling it from the power outlet, then wiping with a dry cloth. Accumulated dust may cause an insulation defect from moisture, etc. resulting in a fire.
- Unplug the product from power outlets if it emits smoke, an abnormal smell, or makes an unusual noise. These conditions can cause fire or electric shock. Confirm that smoke has stopped emitting and contact an authorised service centre.
- Unplug from power outlets and never touch the inside of the product if its casing has been broken open.
- Never touch the plug with wet hands. Danger of electric shock exists.

Installation

- To prevent the risk of fire or electrical shock, do not expose the product to rain or any type of moisture.
- Do not place or use this product near automatically controlled devices such as automatic doors and fire alarms. Radio waves emitted from this product may cause such devices to malfunction resulting in an accident.
- Do not allow the AC adaptor or telephone line cord to be excessively pulled, bent or placed under heavy objects.
- It is advised not to use the equipment at a refuelling point. Users are reminded to observe restrictions on the use of radio equipment in fuel depots, chemical plants or where blasting operations are in progress.

Operating safeguards

- Unplug the product from power outlets before cleaning. Do not use liquid or aerosol cleaners.
- Do not disassemble the product.
- Do not spill liquids (detergents, cleansers, etc.) onto the telephone line cord plug, or allow it to become wet at all. This may cause a fire. If the telephone line cord plug becomes wet, immediately pull it from the telephone wall socket, and do not use.

Medical

- Consult the manufacturer of any personal medical devices, such as pacemakers or hearing aids, to determine if they are adequately shielded from external RF (radio frequency) energy. (The product operates in the frequency range of 1.88 GHz to 1.90 GHz, and the RF transmission power is 250 mW (max.).)
- Do not use the product in health care facilities if any regulations posted in the area instruct you not to do so. Hospitals or health care facilities may be using equipment that could be sensitive to external RF energy.

CAUTION

Installation and location

- Never install telephone wiring during an electrical storm.
- Never install telephone line sockets in wet locations unless the socket is specifically designed for wet locations.
- Never touch uninsulated telephone wires or terminals unless the telephone line has been disconnected at the network interface.

TG672xAL(en)_0125_ver011.pdf 5 2012/01/25 9:16:14

- Use caution when installing or modifying telephone lines.
- The AC adaptor is used as the main disconnect device. Ensure that the AC outlet is installed near the product and is easily accessible.
- This product is unable to make calls when:
  – the handset batteries need recharging or have failed.
  – there is a power failure.
  – the key lock feature is turned on.

Battery

- We recommend using the batteries noted on page 4. **USE ONLY rechargeable Ni-MH batteries AAA (R03) size.**
- Do not mix old and new batteries.
- Do not open or mutilate the batteries. Released electrolyte from the batteries is corrosive and may cause burns or injury to the eyes or skin. The electrolyte is toxic and may be harmful if swallowed.
- Exercise care when handling the batteries. Do not allow conductive materials such as rings, bracelets, or keys to touch the batteries, otherwise a short circuit may cause the batteries and/or the conductive material to overheat and cause burns.
- Charge the batteries provided with or identified for use with this product only, in accordance with the instructions and limitations specified in this manual.
- Only use a compatible base unit (or charger) to charge the batteries. Do not tamper with the base unit (or charger). Failure to follow these instructions may cause the batteries to swell or explode.

General notices

- Please ensure that a separate telephone, not dependent on local power, is available for emergency use.
- This equipment will be inoperable when mains power fails.
- When a failure occurs which results in the internal parts becoming accessible, disconnect the power supply cord immediately and return this unit to an authorised service centre.
- To minimise the possibility of lightning damage, when you know that a thunderstorm is coming, we recommend that you:
  – Unplug the telephone line cord from the phone socket.
  – Unplug the AC adaptor from the AC power outlet.
- No “000” or other calls can be made from this device during a mains power failure.
- The earpiece on the handset is magnetised and may retain small metallic objects.

Important safety instructions

When using your product, basic safety precautions should always be followed to reduce the risk of fire, electric shock, and injury to persons, including the following:

1. Do not use this product near water for example, near a bathtub, washbowl, kitchen sink, or laundry tub, in a wet basement or near a swimming pool.
2. Avoid using a telephone (including a cordless type) during an electrical storm. There may be a remote risk of electric shock from lightning.
3. Do not use the telephone to report a gas leak in the vicinity of the leak.
4. Use only the power cord and batteries indicated in this manual. Do not dispose of batteries in a fire. They may explode. Check with local codes for possible special disposal instructions.

SAVE THESE INSTRUCTIONS

For best performance

Base unit location/avoiding noise

The base unit and other compatible Panasonic units use radio waves to communicate with each other.

- For maximum coverage and noise-free communications, place your base unit:
  – at a convenient, high, and central location with no obstructions between

TG672xAL(en)_0125_ver011.pdf 6 2012/01/25 9:16:14

the handset and base unit in an indoor environment.
– away from electronic appliances such as TVs, radios, personal computers, wireless devices, or other phones.
– facing away from radio frequency transmitters, such as external antennas of mobile phone cell stations. (Avoid putting the base unit on a bay window or near a window.)

- Coverage and voice quality depends on the local environmental conditions.
- If the reception for a base unit location is not satisfactory, move the base unit to another location for better reception.

Environment

- Keep the product away from electrical noise generating devices, such as fluorescent lamps and motors.
- The product should be kept free from excessive smoke, dust, high temperature, and vibration.
- The product should not be exposed to direct sunlight.
- Do not place heavy objects on top of the product.
- When you leave the product unused for a long period of time, unplug the product from the power outlet.
- The product should be kept away from heat sources such as radiators, cookers, etc. It should not be placed in rooms where the temperature is less than 0 °C or greater than 40 °C. Damp basements should also be avoided.
- The maximum calling distance may be shortened when the product is used in the following places: Near obstacles such as hills, tunnels, underground, near metal objects such as wire fences, etc.
- Operating the product near electrical appliances may cause interference. Move away from the electrical appliances.

Routine care

- **Wipe the outer surface of the product with a soft cloth.**
- Do not use benzine, thinner, or any abrasive powder.

Other information

CAUTION: Risk of explosion if battery is replaced by an incorrect type. Dispose of used batteries according to the instructions.

Notice for product disposal, transfer, or return

- This product can store your private/ confidential information. To protect your privacy/confidentiality, we recommend that you erase information such as phonebook or caller list entries from the memory before you dispose of, transfer, or return the product.

Information on Disposal in other Countries outside the European Union

These symbols are only valid in the European Union. If you wish to discard these items, please contact your local authorities or dealer and ask for the correct method of disposal.

Specifications

- **Standard:**
  GAP (Generic Access Profile)
- **Frequency range:**
  1.88 GHz to 1.90 GHz
- **RF transmission power:**
  Approx. 10 mW (average power per channel)
- **Power source:**
  220–240 V AC, 50/60 Hz
- **Power consumption:**
  Base unit:
  Standby: Approx. 0.48 W
  Maximum: Approx. 2.5 W
  Charger:
  Standby: Approx. 0.1 W

TG672xAL(en)_0125_ver011.pdf 7 2012/01/25 9:16:14

Maximum: Approx. 1.8 W

- **Operating conditions:**
  0 °C–40 °C, 20 %–80 % relative air humidity (dry)

Note:

- Design and specifications are subject to change without notice.
- The illustrations in these instructions may vary slightly from the actual product.

TG672xAL(en)_0125_ver011.pdf 8 2012/01/25 9:16:15

Setting up

Connections

- Use only the supplied Panasonic AC adaptor PNLV226AL.
- When mounting the unit on a wall, see page 15.

■ **Base unit**

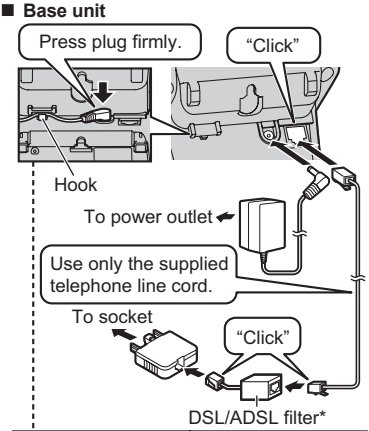

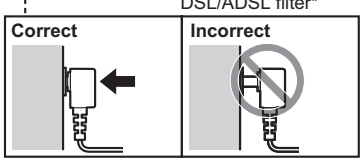

*DSL/ADSL filter (not supplied) is required if you have DSL/ADSL service.

■ **Charger**

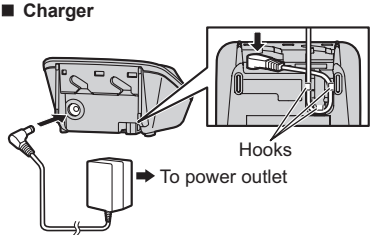

Battery installation

- USE ONLY Ni-MH batteries AAA (R03) size.
- Do NOT use Alkaline/Manganese/Ni-Cd batteries.
- Confirm correct polarities (⊕, ⊖).

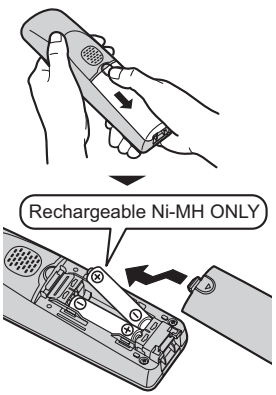

- When the date and time setting is displayed, see page 14.

Battery charging

Charge for about 7 hours.

- When the batteries are fully charged, **"Fully charged"** is displayed.

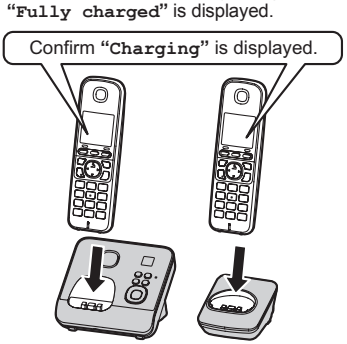

TG672xAL(en)_0125_ver011.pdf 9 2012/01/25 9:16:15

Note when setting up

Note for connections

- The AC adaptor must remain connected at all times. (It is normal for the adaptor to feel warm during use.)
- The AC adaptor should be connected to a vertically oriented or floor-mounted AC outlet. Do not connect the AC adaptor to a ceiling-mounted AC outlet, as the weight of the adaptor may cause it to become disconnected.
- The unit is not designed to be used with rotary/pulse dialling services.

Note for battery installation

- Use the supplied rechargeable batteries. For replacement, we recommend using the Panasonic rechargeable batteries noted on page 4, 6.
- Wipe the battery ends (⊕, ⊖) with a dry cloth.
- Avoid touching the battery ends (⊕, ⊖) or the unit contacts.

Note for battery charging

- It is normal for the handset to feel warm during charging.
- Clean the charge contacts of the handset, base unit, and charger with a soft and dry cloth once a month. Before cleaning the unit, disconnect from power outlets and any telephone line cords. Clean more often if the unit is exposed to grease, dust, or high humidity.

Battery level

Icon	Battery level
	High
	Medium
	Low
	Needs charging.

Panasonic Ni-MH battery performance (supplied batteries)

Operation	Operating time
In continuous use	15 hours max.
Not in use (standby)	170 hours max.

Note:

- It is normal for batteries not to reach full capacity at the initial charge. Maximum battery performance is reached after a few complete cycles of charge/discharge (use).
- Actual battery performance depends on usage and ambient environment.
- Even after the batteries are fully charged, the handset can be left on the base unit or charger without any ill effect on the batteries.
- The battery level may not be displayed correctly after you replace the batteries. In this case, place the handset on the base unit or charger and let it charge for at least 7 hours.

TG672xAL(en)_0125_ver011.pdf 10 2012/01/25 9:16:15

Controls

Handset

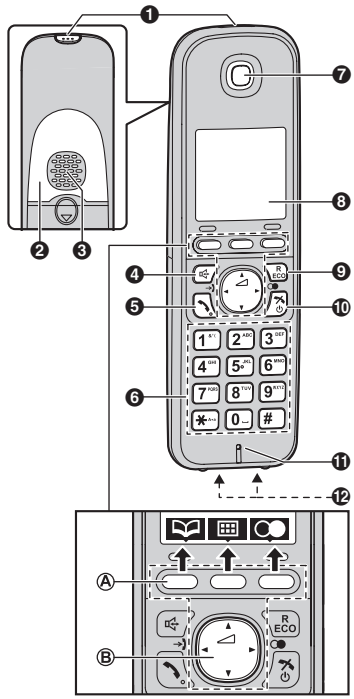

❶ 【Smart function】(Top Key)
Smart function indicator

❷ **Secure grip**
- Secure grip offers support when you cradle the handset between your shoulder and ear.

❸ **Speaker**

❹ 【🔊】**(Speakerphone)**

❺ 【📞】**(Talk)**

❻ **Dial keypad**

❼ **Receiver**

❽ **Display**

❾ 【R/ECO】
R: Recall/Flash
ECO: Eco mode shortcut key

❿ 【✂⏻】**(Off/Power)**

⓫ **Microphone**

⓬ **Charge contacts**

■ **Control type**

Ⓐ **Soft keys**
The handset features 3 soft keys. By pressing a soft key, you can select the feature shown directly above it on the display.

Ⓑ **Navigator key**
- 【▲】, 【▼】, 【◄】, or 【►】: Scroll through various lists and items.
- ◿ (Volume: 【▲】 or 【▼】): Adjust the receiver or speaker volume while talking.
- 【◄】 (➔: Caller list): View the caller list.
- 【►】 (◯●: Redial): View the redial list.

Base unit

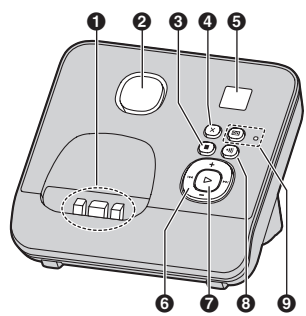

❶ **Charge contacts**

❷ **Speaker**

❸ 【■】**(Stop)**

❹ 【✕】**(Erase)**

❺ **Message counter**

TG672xAL(en)_0125_ver011.pdf 11 2012/01/25 9:16:15

❻ 【+】/【−】 (Volume up/down)
【⏮】/【⏭】 (Repeat/Skip)
❼ 【▶】 (Play)
Message indicator
❽ 【•))】 (Locator)
❾ 【📼】 (Answer on)
Answer on indicator

Display

Handset display items

Item	Meaning
	Range status: The more bars visible, the closer the handset is to the base unit.
	Out of base unit range
	Paging, intercom mode
	Speakerphone is on. (page 17)
	The line is in use. ● When flashing slowly: The call is put on hold. ● When flashing rapidly: An incoming call is now being received.
	Missed call*1 (page 32)
ECO	The base unit transmission power is set to “Low”. (page 15)
	The LCD and key backlight is off. (page 25)
	● When displayed next to the battery icon: Answering system is on. (page 34) ● When displayed with a number: New messages have been recorded. (page 35)
	“Greeting Only” is selected as the caller’s recording time. In this case, the answering system answers calls with a greeting message and caller messages are not recorded. (page 38)
	Battery level
	Alarm is on. (page 28)
	Equalizer is set. (page 18)
	Privacy mode is on. (page 26)
	Ringer volume is off. (page 25)
	Night mode is on. (page 28)
	Blocked call*1 (page 29, 33)
	New voice mail message received.*2 (page 39)
Line in use	Someone is using the line.
IN USE	Answering system is being used by another handset or the base unit.

*1 Caller ID subscribers only
*2 Voice mail subscribers only

Base unit display items

Item	Meaning
--	“Greeting Only” is selected as the caller’s recording time. In this case, the answering system answers calls with a greeting message and caller messages are not recorded. (page 38)

TG672xAL(en)_0125_ver011.pdf 12 2012/01/25 9:16:15

Handset soft key icons

Icon	Action
	Returns to the previous screen or outside call.
	Displays the menu.
OK	Accepts the current selection.
	Displays a previously dialled phone number.
	Makes a call. (page 17)
	Temporarily turns off the ringer for incoming calls. (page 18)
12/24	Sets 24-hour or 12-hour clock format. (page 14)
	Places a call on hold.
	Opens the phonebook.
	Allows you to edit phone numbers. (page 29, 33)
	Adds new entry. (page 21, 29)
	Displays the character entry mode for phonebook search. (page 21)
0	Turns the key lock feature off. (page 19)
	Stops alarm. (page 28)
	Snooze button on the alarm. (page 28)
1/A/?	Selects a character entry mode.
	Selects entries or handsets. (page 14, 27)
	Stops recording or playback.
	Stores phone numbers. (page 29, 33)
P	Inserts a dialling pause.
	Erases the selected item or returns to the outside call.
	Allows you to make an intercom call. (page 40)
C	Erases a number/character.
	Puts the call on mute.

Handset main menu icons

The following icons are shown when you press (middle soft key) in standby mode.

Icon	Feature
	Caller List
	Answer System
	Time Settings
	Intercom
	Initial Setup
	Ringer Setup

Turning the power on/off

Power on

Press 【 】 for about 1 second.

Power off

Press 【 】 for about 2 seconds.

Initial settings

■ **Direct command code:**
Programmable settings can be accessed by pressing , # and then the corresponding code on the dial keypad (page 23).
Example: Press # 1 0 1.
■ **Symbol meaning:**
Example: 【▲▼】: "Off"
Press 【▼】 or 【▲】 to select the words in quotations.

TG672xAL(en)_0125_ver011.pdf 13 2012/01/25 9:16:15

Display language

1 [MENU] [#] [1] [1] [0]

2 [▲▼]: Select your desired language. → [OK]

3 [⏻]

Date and time

Important:

- When you install the batteries for the first time, the handset may prompt you to set date and time. First press [OK], then proceed to step 2.

1 [MENU] [#] [1] [0] [1]

2 Enter the current date, month, and year. → [OK]
Example: 15 July, 2012
[1] [5] [0] [7] [1] [2]

3 Enter the current hour and minute.
Example: 9:30
[0] [9] [3] [0]
- You can select 24-hour or 12-hour clock format (**"AM"** or **"PM"**) by pressing [12/24].

4 [OK] → [⏻]

Note:

- The date and time may be incorrect after a power failure. In this case, set the date and time again.

Smart function key (Top Key)

The smart function key (Top Key) is located on the top of the handset and informs you with its flashing to allow you to activate the following features by simply pressing this key.

■ **When the smart function indicator flashes rapidly, you can:**
- Answer the call (outside call, intercom). (page 17, 40)
- Stop the alarm sound. (page 28)
- Stop paging. (page 40)

■ **When the smart function indicator flashes slowly in standby mode, you can:**
- Listen to new messages. (page 36)
- View the caller list when there are missed calls. (page 33)

To activate these features, their Top key setup must be "On". (page 14)

Using the smart function key (Top Key)

When the smart function indicator flashes rapidly/slowly, press **[Smart function]**.

- The above features can be activated depending the situation.
- If you answer a call using the smart function key, the speakerphone is activated.
- Even if the handset is placed on the base unit or charger, the feature can be activated. You can talk or listen to new messages without lifting up the handset. If you want to perform further operations, lift up the handset.
- When the unit has new messages and missed calls, the unit can be operated to play the new messages first and then show the missed calls.

Note:

- While key lock is on (page 18), incoming calls can be answered, but the following features are disabled even when the smart function indicator flashes slowly.
  - Listen to new messages. (page 36)
  - View the caller list when there are missed calls. (page 33)

Setting the smart function key (Top Key Setup)

The Top key setup for the following features must be "On".
– **"New Message"** (Default: On)
– **"Missed Call"** (Default: Off)
The settings can be set for each handset.

1 [MENU] [#] [2] [7] [8]

2 [▲▼]: Select the desired setting and press [✓].
- "✓" is displayed next to the selected features.

TG672xAL(en)_0125_ver011.pdf 14 2012/01/25 9:16:15

- To cancel a selected feature, press ✓ again. "✓" disappears.

3 OK → [✂⏻]

Note:

- If the smart function indicator flashes when the handset is not placed on the base unit or charger, battery consumption is faster than usual.

One touch eco mode

The **[R/ECO]** button on the handset enables you to activate the eco function with one touch.
By activating eco mode, your unit can reduce the base unit transmission power by up to 90 % in standby mode.
You can turn on/off one touch eco mode by just pressing **[R/ECO]**. The default setting is **"Normal"**.

– When the one touch eco mode is on: **"Low"** is temporarily displayed and ECO is shown on the handset display instead of Y.
– When the one touch eco mode is off: **"Normal"** is temporarily displayed and ECO goes off from the handset display.

Note:

- When there is another cordless phone nearby and it is in use, the base unit transmission power may not be reduced.
- Activating one touch eco mode reduces the range of the base unit in standby mode.
- If you set the repeater mode to **"On"** (page 31):
  – One touch eco mode is cancelled.
  – **"Eco Setup"** is not shown in the display menu (page 25).

Wall mounting

Note:

- Make sure that the wall and the fixing method are strong enough to support the weight of the unit.
- Drive the screws (not supplied) into the wall.

■ **Base unit**

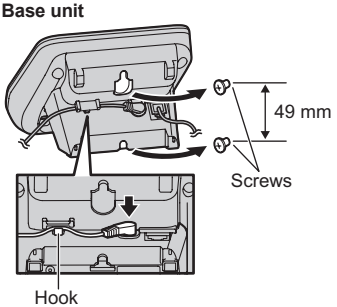

■ **Charger**

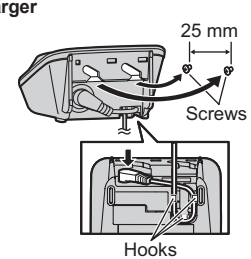

TG672xAL(en)_0125_ver011.pdf 15 2012/01/25 9:16:15

Wall mounting template

■ **Base unit**

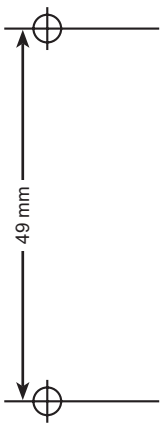

■ **Charger**

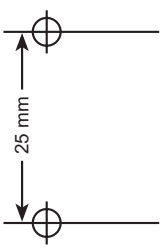

TG672xAL(en)_0125_ver011.pdf 16 2012/01/25 9:16:15

Making calls

1 Lift the handset and dial the phone number.
- To correct a digit, press **C**.

2 Press 【📞】 or 【📞】.

3 When you finish talking, press 【⏻】 or place the handset on the base unit or charger.

Using the speakerphone

1 Dial the phone number and press 【🔊】.
- Speak alternately with the other party.

2 When you finish talking, press 【⏻】.

Note:
- For best performance, use the speakerphone in a quiet environment.
- To switch back to the receiver, press 【🔊】/【📞】.

Adjusting the receiver or speaker volume

Press 【▲】 or 【▼】 repeatedly while talking.

Making a call using the redial list

The last 10 phone numbers dialled are stored in the redial list (each 24 digits max.).

1 ◯ or 【►】 (◯●)

2 【▲▼】: Select the desired phone number.

3 【📞】

Erasing a number in the redial list

1 ◯ or 【►】 (◯●)

2 【▲▼】: Select the desired phone number. → ✕

3 【▲▼】: "Yes" → **OK** → 【⏻】

Pause (for PBX/long distance service users)

A pause is sometimes required when making calls using a PBX or long distance service.

When storing a calling card access number and/or PIN in the phonebook, a pause is also needed (page 22).

Example: If you need to dial the line access number "0" when making outside calls with a PBX:

1 0 → **P**

2 Dial the phone number. → 【📞】

Note:
- A 3 second pause is inserted each time **P** is pressed.

Answering calls

When a call is being received, the smart function indicator flashes rapidly.

1 Lift the handset and press 【📞】 or 【🔊】 when the unit rings.
- You can also answer the call by pressing any dial key from 0 to 9, ✱, or #. **(Any key answer feature)**

2 When you finish talking, press 【⏻】 or place the handset on the base unit or charger.

Using the smart function key

When the smart function indicator flashes rapidly, press **【Smart function】**.
- You can answer the call even if the handset is placed on the base unit or charger (page 14).

You can finish talking by pressing 【⏻】 without lifting up the handset.

Auto talk

You can answer calls simply by lifting the handset off the base unit or charger. You do not need to press 【📞】. To turn this feature on, see page 25.

Adjusting the handset ringer volume

■ **While the handset is ringing for an incoming call:**
Press 【▲】 or 【▼】 repeatedly to select the desired volume.

TG672xAL(en)_0125_ver011.pdf 17 2012/01/25 9:16:16

■ **Programming the volume beforehand:**

1 [MENU] [#] [1] [6] [0]

2 [▲▼]: Select the desired volume.

3 [OK] → [☎/⏻]

Temporary handset ringer off

While the handset is ringing for a call, you can turn the ringer off temporarily by pressing [🔕].

Useful features during a call

Hold

This feature allows you to put an outside call on hold.

1 Press [MENU] during an outside call.

2 [▲▼]: "Hold" → [OK]

3 To release hold, press [☎].
- Another handset user can take the call by pressing [☎].

Note:

- If a call is kept on hold for more than 9 minutes, an alarm tone starts to sound and the smart function indicator flashes rapidly. After 1 additional minute on hold, the call is disconnected.
- If another phone is connected to the same line, you can also take the call by lifting its handset.

Mute

While mute is turned on, you can hear the other party, but the other party cannot hear you.

1 Press [🎤] during conversation.
- [🎤] flashes.

2 To return to the conversation, press [🎤] again.

Recall/flash

【R/ECO】 allows you to use the special features of your host PBX such as transferring an extension call, or accessing optional telephone services.

Note:

- To change the recall/flash time, see page 26.

Handset equalizer

This feature clarifies the voice of the person you are talking to, producing a more natural-sounding voice that is easier to hear and understand.

1 Press [MENU] while talking.

2 [▲▼]: "Equalizer" → [OK]

3 [▲▼]: Select the desired setting.

4 Press [OK] to exit.

Note:

- When this feature is turned on, [((·)] is displayed while talking.
- Depending on the condition and quality of your telephone line, this feature may emphasise existing line noise. If it becomes difficult to hear, turn this feature off.
- This feature is not available while using the speakerphone.

Call share

You can join an existing outside call.
To join the conversation, press [☎] when the other handset is on an outside call.

Note:

- To prevent other users from joining your conversations with outside callers, turn the privacy mode on (page 26).

Key lock

The handset can be locked so that no calls or settings can be made. Incoming calls can be answered, but all other functions are disabled while key lock is on.

TG672xAL(en)_0125_ver011.pdf 18 2012/01/25 9:16:16

To turn key lock on, press [▦] for about 3 seconds.
- [🔒] is displayed.
- To turn key lock off, press [🔒] for about 3 seconds.

Note:
- Calls to emergency numbers cannot be made until key lock is turned off.

Power back-up operation

When a power failure occurs, the charged handset temporarily supplies power to the base unit (power back-up mode). This allows you to make and receive calls using a handset during a power failure. The base unit will not perform any other functions. You can program **"Power Failure"** and the default setting is **"Auto"** (page 26).

Important:
- If a handset is not placed on the base unit when a power failure occurs, **"Base no power Press [⏻]"** or **"Press [⏻]"** is displayed. After pressing **[⏻]** on the handset, place it on the base unit to start power back-up mode.
- Power back-up mode will not work if the battery level of the power supplying handset is [🪫]/[🪫].
- Do not lift the power supplying handset from the base unit during power back-up mode.
- Do not touch the handset's charge contacts during power back-up mode.
- If the battery level is low, the unit will not work sufficiently during power back-up mode. In addition, in case handset battery power runs out, we recommend connecting a corded-type telephone (without AC adaptor) to the same telephone line or to the same telephone line socket using a telephone double adaptor.
- Calls cannot be made during a power failure until key lock is turned off (page 18).
- If **"Please wait for 1 minute."** is displayed, please do not operate the unit until the message disappears.

Panasonic Ni-MH battery performance (supplied batteries) during power back-up mode

When the batteries are fully charged, operating time of the handset in power back-up mode varies depending on usage.
– Continuous use of the handset in power back-up mode: 2 hours max.
– Continuous use of the handset other than a handset in power back-up mode: 3 hours max.
– Not in use in power back-up mode: 3 hours max.

Note:
- Actual battery performance depends on usage and ambient environment.

Making calls during a power failure

■ **When only 1 handset is registered:**

1. Lift the handset and dial the phone number.
2. Within 1 minute, place the handset on the base unit.
   - Wait until speakerphone is turned on automatically and the call is made.
3. When the other party answers the call, keep the handset on the base unit and talk using the speakerphone.
4. When you finish talking, press **[⏻]**.

Note:
- In step 2, if you do not place the handset on the base unit within 1 minute, the power back-up mode turns off. In this case, press **[⏻]** on the handset and dial the phone number. Then try again from step 2.

■ **When 2 or more handsets are registered:**
You should leave one handset on the base unit for supplying power, and use another handset for making calls. For the operation, please see "Making calls", page 17.

TG672xAL(en)_0125_ver011.pdf 19 2012/01/25 9:16:16

Note:

- During a call with the handset placed on the base unit (power back-up mode), the call may be disconnected if you touch the handset. In such case, try to call back.
- The range of the base unit is limited during a power failure. Please use the handset close to the base unit.

Continuing a call during a power failure

When a power failure occurs during an outside call, the unit informs you with a notification tone. You can continue to talk for about 1 minute.

■ **When only 1 handset is registered:**
If you want to continue the conversation, press 【📞】 and then place the handset on the base unit.

■ **When 2 or more handsets are registered:**
If you want to continue the conversation, you should leave another handset on the base unit for supplying power.

TG672xAL(en)_0125_ver011.pdf 20 2012/01/25 9:16:16

Handset phonebook

The phonebook allows you to make calls without having to dial manually. You can add 100 names and phone numbers.

Adding entries

1 [Phonebook] → [Add]
2 Enter the party's name (16 characters max.). → OK
- You can change the character entry mode by pressing 1/A/? (page 41).

3 Enter the party's phone number (24 digits max.). → OK 2 times
- To add other entries, repeat from step 2.

4 [Off]

Finding and calling from a phonebook entry

Scrolling through all entries

1 [Phonebook]
2 [▲▼]: Select the desired entry.
- You can scroll through the phonebook entry by pressing and holding [▼] or [▲].

3 [Talk]

Searching by first character

1 [Phonebook]
- Change the character entry mode if necessary:
  [Menu] → [▲▼]: Select the character entry mode. → OK

2 Press the dial key ([0] to [9], or [#]) which contains the character you are searching for (page 41).
- Press the same dial key repeatedly to display the first entry corresponding to each character located on that dial key.
- If there is no entry corresponding to the character you selected, the next entry is displayed.

3 [▲▼]: Scroll through the phonebook if necessary.
4 [Talk]

Editing entries

1 Find the desired entry (page 21). → [Menu]
2 [▲▼]: "Edit" → OK
3 Edit the name if necessary (16 characters max.; page 41). → OK
4 Edit the phone number if necessary (24 digits max.). → OK 2 times → [Off]

Erasing entries

Erasing an entry

1 Find the desired entry (page 21).
2 [Clear] → [▲▼]: "Yes" → OK → [Off]

Erasing all entries

1 [Phonebook] → [Menu]
2 [▲▼]: "Erase All" → OK
3 [▲▼]: "Yes" → OK
4 [▲▼]: "Yes" → OK → [Off]

Chain dial

This feature allows you to dial phone numbers in the phonebook while you are on a call. This feature can be used, for example, to dial a calling card access number or bank account PIN that you have stored in the phonebook, without having to dial manually.

1 During an outside call, press [Menu].
2 [▲▼]: "Phonebook" → OK
3 [▲▼]: Select the desired entry.
4 Press [Talk] to dial the number.

TG672xAL(en)_0125_ver011.pdf 21 2012/01/25 9:16:16

Note:

- When storing a calling card access number and your PIN in the phonebook as one phonebook entry, press **P** to add pauses after the number and PIN as necessary (page 17).

Copying phonebook entries

You can copy phonebook entries between 2 handsets.

Copying an entry

1 Find the desired entry (page 21). → [⊞]

2 [▲▼]: "`Copy`" → **OK**

3 [▲▼]: Select the handset you want to send the phonebook entry to. → **OK**
- When an entry has been copied, "`Completed`" is displayed.
- To continue copying another entry: [▲▼]: "`Yes`" → **OK** → [▲▼]: Select the desired entry. → **OK**

4 [✂⏻]

Copying all entries

1 [📖] → [⊞]

2 [▲▼]: "`Copy All`" → **OK**

3 [▲▼]: Select the handset you want to send the phonebook entry to. → **OK**
- When all entries have been copied, "`Completed`" is displayed.

4 [✂⏻]

TG672xAL(en)_0125_ver011.pdf 22 2012/01/25 9:16:16

Programmable settings

You can customise the unit by programming the following features using the handset.
To access the features, there are 2 methods.

■ **Scrolling through the display menus**

1 MENU

2 Press **[▼]**, **[▲]**, **[►]**, or **[◄]** to select the desired main menu. → **OK**

3 Press **[▼]** or **[▲]** to select the desired item from the next sub-menus. → **OK**

4 Press **[▼]** or **[▲]** to select the desired setting. → **OK**

- This step may vary depending on the feature being programmed.
- To exit the operation, press **[ⓒ]**.

■ **Using the direct command code**

1 MENU → Enter the desired code.
Example: Press MENU # 1 0 1.

2 Select the desired setting. → **OK**

- This step may vary depending on the feature being programmed.
- To exit the operation, press **[ⓒ]**.

Note:

- In the following table, < > indicates the default settings.
- In the following table, ☞ indicates the reference page number.
- Display menu order and sub-menu may vary depending on your model.

Display the menu tree and direct command code table

Main menu: ➔) **"Caller List"**

Operation	Code	☞
Viewing the caller list.	**#213**	33

Main menu: ⌧ **"Answer System"**

Sub-menu 1	Sub-menu 2	Settings	Code	☞
Play New Msg.	–	–	**#323**	35
Play All Msg.	–	–	**#324**	35
Erase All Msg.*1	–	–	**#325**	36
Greeting	Start REC*1 (Record greeting)	–	**#302**	35
	Play Greeting	–	**#303**	35
	Default*1 (Reset to pre-recorded greeting)	–	**#304**	35

TG672xAL(en)_0125_ver011.pdf 23 2012/01/25 9:16:16

Sub-menu 1	Sub-menu 2	Settings	Code	☞
Settings	Number of Rings*1	**2–9:** 2-9 Rings **5:** <5 Rings> **0:** Auto	**#211**	37
	Recording Time*1	**1:** 1 Minute **3:** <3 Minutes> **0:** Greeting Only*2	**#305**	38
	Remote Code*1	–	**#306**	36
	Call Screening	**1:** <On> **0:** Off	**#310**	34
Answer On*1	–	–	**#327**	34
Answer Off*1	–	–	**#328**	34

Main menu: “Time Settings”

Sub-menu 1	Sub-menu 2	Settings	Code	☞
Set Date/Time*1	–	–	**#101**	14
Memo Alarm	**1–3:** Alarm1-3	**1:** Once **2:** Daily **3:** Weekly **0:** <Off>	**#720**	27
Time Adjustment*1, *3	–	**1:** <Caller ID> **0:** Manual	**#226**	–

Main menu: “Intercom”

Operation	Code	☞
Paging the desired unit.	**#274**	40

TG672xAL(en)_0125_ver011.pdf 24 2012/01/25 9:16:16

Main menu: “Initial Setup”

Sub-menu 1	Sub-menu 2	Settings	Code	☞
Ringer Setup	Ringer Volume – Handset	**0–6:** Off–6 <6>	**#160**	18
	Ringer Volume – Base Unit*1	**0–6:** Off–6 <3>	**#✱160**	–
	Ringtone*4, *5 (Handset)	<Ringtone 1>	**#161**	–
	Night Mode – On/Off	**1:** On **0:** <Off>	**#238**	28
	Night Mode – Start/End	<23:00/06:00>	**#237**	28
	Night Mode – Ring Delay	**1:** 30 sec. **2:** <60 sec.> **3:** 90 sec. **4:** 120 sec. **0:** No Ringing	**#239**	28
	First Ring*1, *6	**1:** <On> **0:** Off	**#173**	–
Time Settings	Set Date/Time*1	–	**#101**	14
	Memo Alarm – **1–3:** Alarm1-3	**1:** Once **2:** Daily **3:** Weekly **0:** <Off>	**#720**	27
	Time Adjustment*1, *3	**1:** <Caller ID> **0:** Manual	**#226**	–
Handset Name	–	–	**#104**	28
Caller Barred*1	–	–	**#217**	29
Eco Setup	Transmission Power*1	**1:** <Normal> **2:** Low	**#725**	15
Display Setup	LCD & Key Backlight	**1:** <On> **0:** Off	**#276**	–
	Contrast (Display contrast)	**1–6:** Level 1-6 <3>	**#145**	–
Top Key Setup	–	–	**#278**	14
Keytones*7	–	**1:** <On> **0:** Off	**#165**	–
Area Code*1	–	–	**#255**	29
Call Restrict*1	–	–	**#256**	29
Auto Talk*8	–	**1:** On **0:** <Off>	**#200**	17

TG672xAL(en)_0125_ver011.pdf 25 2012/01/25 9:16:17

Sub-menu 1	Sub-menu 2	Settings	Code	☞
Line Setup	Recall/Flash*1, *9	**0:** 900 msec. **1:** 700 msec. **2:** 600 msec. **3:** 400 msec. **4:** 300 msec. **5:** 250 msec. **✱:** 200 msec. **#:** 160 msec. **6:** 110 msec. **7:** <100 msec.> **8:** 90 msec. **9:** 80 msec.	**#121**	18
Privacy Mode*1, *10	–	**1:** On **0:** <Off>	**#194**	–
Base Unit PIN*1	–	<0000>	**#132**	30
Repeater Mode*1	–	**1:** On **0:** <Off>	**#138**	31
Register	Register H.set	–	**#130**	30
	Cancel Register*2	–	**#131**	30
Power Failure	–	**1:** <Auto> **0:** Off	**#152**	19
Language	Display	<English>	**#110**	14

Main menu: ♪ "Ringer Setup"

Sub-menu 1	Sub-menu 2	Settings	Code	☞
Ringer Volume	Handset	**0–6:** Off–6 <6>	**#160**	18
	Base Unit *1	**0–6:** Off–6 <3>	**#✱160**	–
Ringtone*4, *5 (Handset)	–	<Ringtone 1>	**#161**	–
Night Mode	On/Off	**1:** On **0:** <Off>	**#238**	28
	Start/End	<23:00/06:00>	**#237**	28
	Ring Delay	**1:** 30 sec. **2:** <60 sec.> **3:** 90 sec. **4:** 120 sec. **0:** No Ringing	**#239**	28
First Ring*1, *6	–	**1:** <On> **0:** Off	**#173**	–

*1 If you program these settings using one of the handsets, you do not need to program the same item using another handset.
*2 This menu is not displayed when scrolling through the display menus. It is only available in direct command code.
*3 This feature allows the unit to automatically adjust the date and time each time caller information including date and time is received.

TG672xAL(en)_0125_ver011.pdf 26 2012/01/25 9:16:17

To turn this feature on, select **"Caller ID"**. To turn this feature off, select **"Manual"**. (Caller ID subscribers only)
To use this feature, set the date and time first (page 14).

*4 The ringer tone may continue to play for several seconds even if the caller has already hung up. You may either hear a dial tone or no one on the line when you answer the call.

*5 The preset melodies in this product are used with permission of © 2010 Copyrights Vision Inc.

*6 If you do not want the unit to ring before the caller information is received, set to **"Off"**. (Caller ID subscribers only)
You can only remove the first ring if the unit rings two times or more by default, which depends on your service provider/telephone company.

*7 Turn this feature off if you prefer not to hear key tones while you are dialling or pressing any keys, including confirmation tones and error tones.

*8 If you subscribe to a Caller ID service and want to view the caller's information after lifting up the handset to answer a call, turn off this feature.

*9 The recall/flash time depends on your telephone exchange or host PBX. Contact your PBX supplier if necessary.
You can access your service provider/telephone company "call waiting" service by having the recall/flash time set at **"100 msec."**, and then follow your service provider/telephone company "call waiting" instructions to operate this service.

*10 To prevent other users from joining your conversations with outside callers, turn this feature on.

Special programming

Alarm

An alarm sounds at the set time for 1 minute and is repeated 5 times at 5 minute intervals (snooze function). A text memo can also be displayed for the alarm. A total of 3 separate alarm times can be programmed for each handset. You can set one of 3 different alarm options (once, daily, or weekly) for each alarm time.

Important:

- Set the date and time beforehand (page 14).

1 MENU #720

2 Select an alarm by pressing 1 to 3. → OK

3 [▲▼]: Select the desired alarm option. → OK

"Off" Turns alarm off. Go to step 9.
"Once" An alarm sounds once at the set time.
"Daily" An alarm sounds daily at the set time. Go to step 5.
"Weekly" Alarm sounds weekly at the set time(s).

4 Proceed with the operation according to your selection in step 3.

- **Once:**
  Enter the desired date and month. → OK
- **Weekly:**
  [▲▼]: Select the desired day of the week and press ✓. → OK

5 Set the desired time. → OK

6 Enter a text memo (10 characters max.; page 41). → OK

TG672xAL(en)_0125_ver011.pdf 27 2012/01/25 9:16:18

7 [▲▼]: Select the desired alarm tone. → OK
- We recommend selecting a different ringer tone from the one used for outside calls.

8 [▲▼]: Select the desired snooze setting. → OK

9 OK → [⏻]
- When the alarm is set, ◴ is displayed.

Note:

- Press [⏻] to stop the alarm completely.
- When the handset is in use, the alarm will not sound until the handset is in standby mode.
- Press any dial key, **[Smart function]**, or [⏻] to stop the sound but keep the snooze function activated.
- If you want to make an outside call when the snooze function is activated, please stop the snooze function before making the call.

Night mode

Night mode allows you to select a period of time during which the handset will not ring for outside calls. This feature is useful for time periods when you do not want to be disturbed, for example, while sleeping. Night mode can be set for each handset.

Important:

- Set the date and time beforehand (page 14).
- We recommend turning the base unit ringer off (page 25) in addition to turning the night mode on.
- If you have set the alarm, the alarm sounds even if the night mode is turned on.

Turning night mode on/off

1 [menu] # 2 3 8

2 [▲▼]: Select the desired setting. → OK
- If you select **"Off"**, press **[⏻]** to exit.

3 Enter the desired hour and minute you wish to start this feature. → OK
- You can select 24-hour or 12-hour clock format (**"AM"** or **"PM"**) by pressing 12/24.

4 Enter the desired hour and minute you wish to end this feature. → OK

5 [⏻]
- When the night mode is set, ☾ is displayed.

Changing the start and end time

1 [menu] # 2 3 7

2 Continue from step 3, "Turning night mode on/off", page 28.

Setting the ring delay

This setting allows the handset to ring during night mode if the caller waits long enough. After the selected amount of time passes, the handset rings. If you select **"No Ringing"**, the handset never rings during night mode.

1 [menu] # 2 3 9

2 [▲▼]: Select the desired setting. → OK → [⏻]

Note:

- When the answering system answers the call, this feature does not work.

Changing the handset name

Each handset can be given a customised name ("Bob", "Kitchen", etc.). This is useful when you make intercom calls between handsets. You can also select whether or not the handset name is displayed in standby mode. The default setting is **"No"**. If you select **"Yes"** without entering any handset name, **"Handset 1"** to **"Handset 6"** is displayed.

1 [menu] # 1 0 4

2 Enter the desired name (max. 10 characters; page 41).
- If not required, go to step 3.

3 OK

TG672xAL(en)_0125_ver011.pdf 28 2012/01/25 9:16:18

4 【▲▼】: Select the desired setting. → OK 2 times

5 【↘⏻】

Incoming call barring (Caller ID subscribers only)

This feature allows the unit to reject calls from specified phone numbers that you do not want to answer such as junk calls.
When a call is received, the unit does not ring while the caller is being identified. If the phone number matches an entry in the call barred list, the unit sends out a busy tone to the caller, and then disconnects the call.

Important:

- When the unit receives a call from a number that is stored in the call barred list, the call is logged in the caller list (page 33) with ✕ after the call is disconnected.

Storing unwanted callers

You can store up to 30 phone numbers in the call barred list.

Important:

- You must store the phone number with an area code in the call barred list.

■ **From the caller list:**

1 【◄】(📞)

2 【▲▼】: Select the entry to be barred. → 📝

3 【▲▼】: "Caller Barred" → OK

4 【▲▼】: "Yes" → OK → 【↘⏻】

■ **By entering phone numbers:**

1 📖 #217 → 📝

2 Enter the phone number (24 digits max.). → OK

- To erase a digit, press C.

3 【↘⏻】

Viewing/editing/erasing bar call numbers

1 📖 #217

2 【▲▼】: Select the desired entry.

- To exit, press 【↘⏻】.

3 **To edit a number:**
📝 → Edit the phone number. → OK → 【↘⏻】
To erase a number:
✕ → 【▲▼】: "Yes" → OK → 【↘⏻】

Note:

- When editing, press the desired dial key to add, C to erase.

Storing an area code to be deleted automatically

In some situations, phone numbers stored automatically in the caller list (page 33) will include area codes. If you do not want to dial the area code when making calls from the caller list, you can store the area code which you want the unit to delete automatically.
Example: You have stored the area code "123". If you make a call from the caller list to the phone number "123-456-7890", the unit dials "456-7890".

1 📖 #255

2 Enter an area code (5 digits max.). → OK → 【↘⏻】

Setting call restriction

You can restrict selected handsets from dialling certain numbers. You can assign up to 6 phone numbers to be restricted, and select which handsets are to be restricted. Storing area codes here prevents the restricted handsets from dialling any phone number in that area code.

1 📖 #256

2 Enter the base unit PIN (default: "0000").

- If you forget your PIN, contact an authorised service centre.

TG672xAL(en)_0125_ver011.pdf 29 2012/01/25 9:16:18

3 Select the handsets to be restricted by pressing 1 to 6.
- All handsets registered to the base unit are displayed.
- "✓" is displayed next to the selected handset numbers.
- To cancel a selected handset, press the same dial key again. "✓" disappears.

4 OK

5 Select a memory location by pressing 1 to 6. → OK

6 Enter the phone number or area code to be restricted (8 digits max.). → OK → [⏻]
- To erase a restricted number, press C.

Changing the base unit PIN (Personal Identification Number)

Important:

- If you change the PIN, please make note of your new PIN. The unit will not reveal the PIN to you. If you forget your PIN, contact an authorised service centre.

1 [menu] # 1 3 2

2 Enter the current 4-digit base unit PIN (default: "0000").

3 Enter the new 4-digit base unit PIN. → OK → [⏻]

Registering a unit

Operating additional units

Additional handsets

Up to 6 handsets can be registered to the base unit.

Important:

- The additional handset model recommended for use with this unit is noted on page 4. If another handset model is used, certain operations (handset settings, base unit settings, etc.) may not be available.

Registering a handset to the base unit

The supplied handset and base unit are pre-registered. If for some reason the handset is not registered to the base unit (for example, ✗ is displayed even when the handset is near the base unit), re-register the handset.

1 **Handset:**
[menu] # 1 3 0

2 **Base unit:**
Press and hold [•))] for about 5 seconds, until the registration tone sounds.
- If all registered handsets start ringing, press [•))] again to stop, then repeat this step.
- The next step must be completed within 90 seconds.

3 **Handset:**
OK → Wait until "Base PIN" is displayed. → Enter the base unit PIN (default: "0000"). → OK
- If you forget your PIN, contact an authorised service centre.
- When the handset has been registered successfully, ✗ is displayed.

Note:

- While registering, "Base in registering" is displayed on all registered handsets.
- When you purchase an additional handset, refer to the additional handset's installation manual for registration.

Deregistering a handset

A handset can cancel its own registration to the base unit, or other handsets registered to the same base unit. This allows the handset to end its wireless connection with the system.

1 [menu] # 1 3 1
- All handsets registered to the base unit are displayed.

TG672xAL(en)_0125_ver011.pdf 30 2012/01/25 9:16:18

2 [▲▼]: Select the handset you want to cancel. → **OK**

3 [▲▼]: **"Yes"** → **OK**
- A confirmation tone sounds.
- The handset does not beep when cancelling its own registration.

4 [ ]

Increasing the range of the base unit

You can increase the signal range of the base unit by using a DECT repeater. Please use only the Panasonic DECT repeater noted on page 4. Contact your Panasonic dealer for details.

Important:
- Before registering the repeater to this base unit, you must turn the repeater mode on.
- Do not use more than one repeater at a time.

Setting the repeater mode

1 [ ] # 1 3 8

2 [▲▼]: Select the desired setting. → **OK** → [ ]

Note:
- After turning the repeater mode on or off, is displayed on the handset momentarily. This is normal and the handset can be used once is displayed.

Registering the DECT repeater (KX-A405AL) to the base unit

Note:
- Please use a repeater that has not yet been registered to another unit. If the repeater is registered to another unit, deregister it first, referring to the Installation Guide for the DECT repeater.

1 **Base unit:**
Press and hold [ ] for about 5 seconds, until the registration tone sounds.
- The next step must be completed within 90 seconds.

2 **DECT repeater:**
Connect the AC adaptor, then wait until the ⓘ indicator and indicator light green.

3 **Base unit:**
To exit the registration mode, press [ ].
- The registration tone stops.

TG672xAL(en)_0125_ver011.pdf 31 2012/01/25 9:16:18

Using Caller ID service

Important:

- This unit is Caller ID compatible. To use Caller ID features (such as displaying caller phone numbers), you must subscribe to a Caller ID service. Contact your service provider/telephone company for details.

Caller ID features

When an outside call is being received, the caller's phone number is displayed.
Caller information for the last 50 callers is logged in the caller list from the most recent call to the oldest.

- If the unit cannot receive caller information, the following is displayed:
  - **"Out of Area"**: The caller dials from an area which does not provide a Caller ID service.
  - **"Private Caller"**: The caller requests not to send caller information.
- If the unit is connected to a PBX system, caller information may not be properly received. Contact your PBX supplier.

Missed calls

If a call is not answered, the unit treats it as a missed call and 📞 is displayed. This lets you know if you should view the caller list to see who called while you were away.
Even if only one missed call in the caller list is viewed (page 33), 📞 disappears from the display. When you receive another new call, 📞 is displayed again.

Note:

- Even when there are unviewed missed calls, 📞 disappears from the standby display if the following operation is performed by one of the registered handsets:
  - Being replaced on the base unit or charger.
  - Pressing **【】**.

Phonebook name display

When caller information is received and it matches a phone number stored in the phonebook, the stored name in the phonebook is displayed and logged in the caller list.

Call waiting and Caller ID compatible

If you subscribe to Caller ID service, your handset displays the 2nd caller's information while talking. After you hear a call waiting tone, the caller's phone number will be displayed.
You can answer the 2nd call, keeping the 1st call on hold. Follow your service provider/ telephone company instructions using **【R/ECO】**. (Recall/flash function)

- If the phone number is stored in the phonebook with its name, the caller's name will also be displayed.
- Please contact your service provider/ telephone company for details and availability in your area.

For Caller ID Type II users

When you receive a 2nd call during a conversation, you will hear a signal tone following the call waiting tone and the **conversation will be interrupted or muted for a short period of time**. This is not a fault of the product as these events are normal.

- The tones are generated by your service provider/telephone company.

Caller list

Important:

- Only 1 person can access the caller list at a time.
- Make sure the unit's date and time setting is correct (page 14).

TG672xAL(en)_0125_ver011.pdf 32 2012/01/25 9:16:18

Viewing the caller list and calling back

1 【◄】(↔)

2 Press 【▼】to search from the most recent call, or press 【▲】to search from the oldest call.
- If ▶ is displayed, not all of the information is shown. To see the remaining information, press 【►】. To return to the previous screen, press 【◄】.

3 To call back, press 【📞】.
To exit, press 【⏻】.

Note:
- If the entry has already been viewed or answered, "✓" is displayed, even if it was viewed or answered using another handset.
- If the call matches an entry in the call barred list, the number is logged with ✕ (page 29).
- If you do not want to dial the area code when making calls from the caller list, you can store the area code which you want the unit to delete automatically (page 29).

Using the smart function key

When ↔ is displayed and the smart function indicator flashes slowly, there are missed calls. Press **【Smart function】** in step 1 on "Viewing the caller list and calling back", page 33.
- **"Missed Call"** must be set to "On" in Top key setup (page 14).
- If the handset is placed on the base unit or charger, you need to lift up the handset to view the caller list after pressing **【Smart function】**.
- When the unit has new messages and missed calls, the unit can be operated to play the new messages first and then show the missed calls.

Editing a caller's phone number before calling back

1 【◄】(↔)

2 【▲▼】: Select the desired entry.

3 📖 → Edit the number.
- Press dial key ([0] to [9]) to add, C to delete.

4 【📞】

Erasing selected caller information

1 【◄】(↔)

2 【▲▼】: Select the desired entry.

3 ✕ → 【▲▼】: **"Yes"** → OK → 【⏻】

Erasing all caller information

1 【◄】(↔)

2 ✕ → 【▲▼】: **"Yes"** → OK → 【⏻】

Storing caller information to the phonebook

1 【◄】(↔)

2 【▲▼】: Select the desired entry. → 📁

3 【▲▼】: **"Phonebook"** → OK

4 To store the name, continue from step 2, "Adding entries", page 21.

TG672xAL(en)_0125_ver011.pdf 33 2012/01/25 9:16:18

Answering system

The answering system can answer and record calls for you when you are unavailable to answer the phone.
You can also set the unit to play a greeting message but not to record caller messages by selecting **"Greeting Only"** as the recording time setting (page 38).

Important:

- Only 1 person can access the answering system (listen to messages, record a greeting message, etc.) at a time.
- When callers leave messages, the unit records the day and time of each message. Make sure the date and time have been set correctly (page 14).

Memory capacity (including your greeting message)

The total recording capacity is about 30 minutes. A maximum of 64 messages can be recorded.

Note:

- When message memory becomes full:
  - **"Messages Full"** is shown on the handset display.
  - The answer on indicator on the base unit flashes rapidly if the answering system is turned on.
  - The message counter on the base unit flashes if the answering system is turned on.
  - and the total number of new messages are not displayed on the handset even if the answering system is turned on.
  - If you use the pre-recorded greeting message, the unit automatically switches to another pre-recorded greeting message asking callers to call again later.
  - If you recorded your own greeting message, the same message is still announced to callers even though their messages are not recorded.

Turning the answering system on/off

The answering system is preset to on.

Base unit

Press 【 】 to turn on/off the answering system.

- When the answering system is turned on:
  - The answer on indicator lights up.
  - The message counter displays the total number of messages (old and new).

Handset

1 **To turn on:**
【 】#327
To turn off:
【 】#328

2 【 】

Note:

- When the answering system is turned on, is displayed next to the battery icon.

Call screening

While a caller is leaving a message, you can listen to the call through the handset's speaker. To adjust the speaker volume, press 【▲】 or 【▼】 repeatedly. You can answer the call by pressing 【 】 on the handset. Call screening can be set for each handset. The default setting is **"On"**.

1 【 】#310

2 【▲▼】: Select the desired setting. → **OK** → 【 】

Greeting message

When the unit answers a call, a greeting message is played to callers.
You can use either:
– your own greeting message
– a pre-recorded greeting message

TG672xAL(en)_0125_ver011.pdf 34 2012/01/25 9:16:19

Recording your greeting message

1 [⊞] [#] [3] [0] [2]
2 [▲▼]: "Yes" → [OK]
3 After a beep sounds, hold the handset about 20 cm away and speak clearly into the microphone (2 minutes and 30 seconds max.).
4 Press [■] to stop recording.
5 [⚒⏻]

Using a pre-recorded greeting message

The unit provides 2 pre-recorded greeting messages:
– If you erase or do not record your own greeting message, the unit plays a pre-recorded greeting asking callers to leave a message.
– If the message recording time (page 38) is set to "Greeting Only", callers' messages are not recorded and the unit plays a different pre-recorded greeting message asking callers to call again.

Resetting to a pre-recorded greeting message

If you want to use a pre-recorded greeting message once you record your own greeting message, you need to erase your own greeting message.

1 [⊞] [#] [3] [0] [4]
2 [OK] → [⚒⏻]

Playing back the greeting message

1 [⊞] [#] [3] [0] [3]
2 [⚒⏻]

Listening to messages using the base unit

When new messages have been recorded, [▶] on the base unit flashes.
Press [▶].
- If new messages have been recorded, the base unit plays back new messages.
- If there are no new messages, the base unit plays back all messages.

Operating the answering system during playback

Key	Operation
[+] or [−]	Adjust the speaker volume
[⏮]	Repeat message*1
[⏭]	Skip message
[■]	Stop playback
[✕]	Erase currently playing message

*1 If pressed within the first 5 seconds of a message, the previous message is played.

Erasing all messages

Press [✕] 2 times while the unit is not in use.

Listening to messages using the handset

When new messages have been recorded, [📼] is displayed on the handset with the total number of new messages.

1 **To listen to new messages:**
[⊞] [#] [3] [2] [3]
To listen to all messages:
[⊞] [#] [3] [2] [4]
2 When finished, press [⚒⏻].

Note:
- To switch to the receiver, press [📞].

TG672xAL(en)_0125_ver011.pdf 35 2012/01/25 9:16:19

Using the smart function key

When ✉ is displayed and the smart function indicator flashes slowly, there are new messages.
Press **[Smart function]** in step 1 on "Listening to messages using the handset", page 35.

- **"New Message"** must be set to "On" in Top key setup (page 14).

Operating the answering system

▦ → 📼 → **OK**

Key	Operation
[▲] or **[▼]**	Adjust the receiver or speaker volume (during playback)
1 or **[◄]**	Repeat message (during playback)*1
2 or **[►]**	Skip message (during playback)
3	Enter the **"Settings"** menu
4	Play new messages
5	Play all messages
6	Play greeting message
7 6	Record greeting message
8	Turn answering system on
▦	Pause message*2
9 or ■	Stop recording Stop playback
0	Turn answering system off
✱ 4 *3	Erase currently playing message
✱ 5	Erase all messages
✱ 6	Reset to a pre-recorded greeting message

*1 If pressed within the first 5 seconds of a message, the previous message is played.
*2 To resume playback:
[▲▼]: **"Play"** → **OK**
*3 You can also erase as follows:
✕ → **[▲▼]**: **"Yes"** → **OK**

Calling back (Caller ID subscribers only)

If caller information is received for the call, you can call the caller back while listening to a message.

1 Press ▦ during playback.
2 **[▲▼]**: **"Call Back"** → **OK**

Editing the number before calling back

1 Press ▦ during playback.
2 **[▲▼]**: **"Edit & Call"** → **OK**
3 Edit the number. → **[📞]**

Erasing all messages

1 ▦ # 3 2 5
2 **[▲▼]**: **"Yes"** → **OK** → **[✕⏻]**

Remote operation

Using a touch-tone phone, you can call your phone number from outside and access the unit to listen to messages or change answering system settings. The unit's voice guidance prompts you to press certain dial keys to perform different operations.

Remote access code

A 3-digit remote access code must be entered when operating the answering system remotely. This code prevents unauthorised parties from listening to your messages remotely.

Important:

- In order to operate the answering system remotely, you must first set a remote access code.

1 ▦ # 3 0 6
2 To turn on remote operation, enter the desired 3-digit remote access code.
3 **OK** → **[✕⏻]**

TG672xAL(en)_0125_ver011.pdf 36 2012/01/25 9:16:19

Deactivating remote operation

Press ✱ in step 2 on “Remote access code”, page 36.
- The entered remote access code is deleted.

Using the answering system remotely

1. Dial your phone number from a touch-tone phone.
2. After the greeting message starts, enter your remote access code.
3. Follow the voice guidance prompts as necessary or control the unit using remote commands (page 37).
4. When finished, hang up.

Voice guidance

During remote operation, the unit’s voice guidance starts and prompts you to press 1 to perform a specific operation, or press 2 to listen to more available operations.

Note:
- If you do not press any dial keys within 10 seconds after a voice guidance prompt, the unit disconnects your call.

Remote commands

You can press dial keys to access certain answering system functions without waiting for the voice guidance to prompt you.

Key	Operation
1	Repeat message (during playback)*1
2	Skip message (during playback)
4	Play new messages
5	Play all messages
6	Play greeting message
7	Record greeting message
9	Stop recording Stop playback
0	Turn answering system off
✱4	Erase currently playing message
✱5	Erase all messages
✱6	Reset to a pre-recorded greeting message (during greeting message playback)
✱#	End remote operation (or hang up)

*1 If pressed within the first 5 seconds of a message, the previous message is played.

Turning on the answering system remotely

If the answering system is off, you can turn it on remotely.

1. Dial your phone number from a touch-tone phone.
2. Let the phone ring 15 times.
   - A long beep is heard.
3. Enter your remote access code within 10 seconds after the long beep.
   - The greeting message is played back.
   - You can either hang up, or enter your remote access code again and begin remote operation (page 36).

Answering system settings

Number of rings before the unit answers a call

You can change the number of times the phone rings **“Number of Rings”** before the unit answers a call. You can select 2 to 9 rings, or **“Auto”**. The default setting is **“5 Rings”**.

“Auto”: The unit’s answering system answers at the end of the 2nd ring when new messages have been recorded, or at the end of the 5th ring when there are no new messages. If you call your phone from outside

TG672xAL(en)_0125_ver011.pdf 37 2012/01/25 9:16:19

to listen to new messages (page 37), you know that there are no new messages when the phone rings for the 3rd time. You can then hang up without being charged for the call.

1 [⊞] [#] [2] [1] [1]

2 [▲▼]: Select the desired setting. → OK → [⚒⏻]

For service provider voice mail subscribers

To receive voice mail and use the answering system properly, please note the following:

- "Voice mail" is a service provided by your service provider/telephone company (page 39). You will need to first subscribe or activate this service through your service provider/telephone company. Contact your service provider/telephone company on how to operate this service and how you will be notified that you have messages on your voice mail.
  To use this service you will be required to leave your answering machine off on your unit.
  This will allow the voice mail to receive any messages.
- To use the unit's answering machine rather than the voice mail service provided by your service provider/telephone company, please contact your service provider/telephone company to have it removed or deactivated permanently or temporarily. Alternatively you can leave this service connected and change the **"Number of Rings"** to a shorter duration on your unit so your unit's answering machine can pick up the call prior to the voice mail provided by your service provider/telephone company.

Caller's recording time

You can change the maximum message recording time allowed for each caller. The default setting is **"3 Minutes"**.

1 [⊞] [#] [3] [0] [5]

2 [▲▼]: Select the desired setting. → OK → [⚒⏻]

Selecting "Greeting Only"

You can select **"Greeting Only"** which sets the unit to announce a greeting message to callers but not record messages.
Select **"Greeting Only"** in step 2 on "Caller's recording time", page 38.

Note:

- When you select **"Greeting Only"**:
  - If you do not record your own message, the unit will play the pre-recorded greeting-only message asking callers to call again later.
  - If you use your own message, record the greeting-only message asking callers to call again later (page 35).

TG672xAL(en)_0125_ver011.pdf 38 2012/01/25 9:16:20

Voice mail service

Voice mail is an automatic answering service offered by your service provider/telephone company. After you subscribe to this service, your service provider/telephone company's voice mail system answers calls for you when you are unavailable to answer the phone or when your line is busy. Messages are recorded by your service provider/telephone company, not your telephone. When you have new messages, ✉ is displayed on the handset if message indication service is available. Please contact your service provider/telephone company for details of this service.

Important:

- If ✉ still remains on the display even after you have listened to new messages, turn it off by pressing and holding # for 2 seconds.
- To use the voice mail service provided by your service provider/telephone company rather than the unit's answering system, turn off the answering system (page 34). For details, see page 38.

TG672xAL(en)_0125_ver011.pdf 39 2012/01/25 9:16:20

Intercom

Intercom calls can be made between handsets.

Note:

- When paging the handset, the paged handset beeps for 1 minute.
- If you receive an outside call while talking on the intercom, you hear 2 tones. To answer the call, press 【⏻】, then press 【】.

Making an intercom call

1 [▦] → [•))]
2 【▲▼】: Select the desired unit. → OK
   - To stop paging, press 【⏻】.
3 When you finish talking, press 【⏻】.

Answering an intercom call

1 Press 【】 to answer the page.
2 When you finish talking, press 【⏻】.

Using the smart function key

Press 【**Smart function**】 to answer the page.

Handset locator

You can locate a misplaced handset by paging it.

1 **Base unit:** Press 【•))】.
   - All registered handsets beep for 1 minute.
2 To stop paging:
   Base unit: Press 【•))】.
   Handset: Press 【⏻】.

Using the smart function key

You can also stop paging by pressing 【**Smart function**】.

Transferring calls, conference calls

Outside calls can be transferred or a conference call with an outside party can be made between 2 handsets.

1 During an outside call, press [•))] to put the call on hold.
2 【▲▼】: Select the desired unit. → OK
3 Wait for the paged party to answer.
   - If the paged party does not answer, press [↩] to return to the outside call.
4 **To complete the transfer:**
   Press 【⏻】.
   - The outside call is being routed to the destination unit.

   To establish a conference call:
   [▦] → 【▲▼】: "`Conference`" → OK
   - To leave the conference, press 【⏻】. The other 2 parties can continue the conversation.
   - To put the outside call on hold: [▦] → 【▲▼】: "`Hold`" → OK
     To resume the conference: [▦] → 【▲▼】: "`Conference`" → OK

Note:

- If you want to return to the outside call after the paged party answers, press [✕].

Answering a transferred call

Press 【】 to answer the page.

Using the smart function key

Press 【**Smart function**】 to answer the page.

TG672xAL(en)_0125_ver011.pdf 40 2012/01/25 9:16:20

Character entry

The dial keys are used to enter characters and numbers. Each dial key has multiple characters assigned to it. The characters that can be entered depend on the character entry mode (page 41).

– Press 【◄】 or 【►】 to move the cursor left or right.
– Press dial keys to enter characters and numbers.
– Press C to erase the character or number highlighted by the cursor. Press and hold C to erase all characters or numbers.
– Press ✻ (A→a) to switch between uppercase and lowercase.
– To enter another character located on the same dial key, press 【►】 to move the cursor to the next space, then press the appropriate dial key.
– If you do not press any dial key within 5 seconds after entering a character, the character is fixed and the cursor moves to the next space.

Character entry modes

The available character entry modes are Alphabet (ABC), Numeric (0-9), Greek (ΑΒΓ), Extended 1 (AÄÅ), Extended 2 (SŚŠ), and Cyrillic (АБВ). When in these entry modes except Numeric, you can select which character is entered by pressing a dial key repeatedly.

When the unit displays the character entry screen:
1/A/? → 【▲▼】: Select a character entry mode. → OK

Note:

- ␣ in the following tables represents a single space.

Alphabet character table (ABC)

0	1	2	3	4	5	6	7	8	9	#
␣ 0	& ' ( ) ✻ , - . / 1	A B C 2	D E F 3	G H I 4	J K L 5	M N O 6	P Q R S 7	T U V 8	W X Y Z 9	#
		a b c 2	d e f 3	g h i 4	j k l 5	m n o 6	p q r s 7	t u v 8	w x y z 9	

Numeric entry table (0-9)

0	1	2	3	4	5	6	7	8	9	#
0	1	2	3	4	5	6	7	8	9	#

Greek character table (ΑΒΓ)

0	1	2	3	4	5	6	7	8	9	#
␣ 0	& ' ( ) ✻ , - . / 1	A B Γ 2	Δ E Z 3	H Θ I 4	K Λ M 5	N Ξ O 6	Π P Σ 7	T Y Φ 8	X Ψ Ω 9	#

TG672xAL(en)_0125_ver011.pdf 41 2012/01/25 9:16:20

Extended 1 character table (AÄÅ)

0	1	2	3	4	5	6	7	8	9	#
␣ 0	& ' ( ) * , - . / 1	A À Á Â Ã Ä Å Æ B C Ç 2	D E È É Ê Ë Ē F 3	G Ğ H I Ì Í Î Ï Ī İ Ĭ 4	J K L 5	M N Ñ O Ò Ó Ô Õ Ö ø 6	P Q R S Ş ß 7	T U Ù Ú Û Ü Ũ V 8	W Ŵ X Y ŷ Z 9	#
		a à á â ã ä å æ b c ç 2	d e è é ê ë ē f 3	g ğ h i ì í î ï ī ı ĭ 4	j k l 5	m n ñ o ò ó ô õ ö ø 6	p q r s ş ß 7	t u ù ú û ü ũ v 8	w Ŵ x y ŷ z 9	

- The following are used for both uppercase and lowercase: ø Ŵ ŷ

Extended 2 character table (SŚŠ)

0	1	2	3	4	5	6	7	8	9	#
␣ 0	& ' ( ) * , - . / 1	A Á Ä Ą B C Ć Č 2	D Ď E É Ę Ě F 3	G H I Í 4	J K L Ł Ĺ Ľ 5	M N Ń Ň O Ó Ö Ő 6	P Q R Ŕ Ř S Ś Š 7	T Ť U Ú Ü Ű ů V 8	W X Y ỳ Ý Z Ź Ż Ž 9	#
		a á ä ą b c ć č 2	d ď e é ę ě f 3	g h i í 4	j k l Ł ĺ ľ 5	m n Ń ň o ó ö ő 6	p q r ŕ ř s ś š 7	t ť u ú ü ű ů v 8	w x y ỳ ý z ź ż ž 9	

- The following are used for both uppercase and lowercase:

  Ą Ć Č Ę Ł Ĺ Ľ Ń Ŕ Ś Š ů ỳ Ź Ż Ž

Cyrillic character table (АБВ)

0	1	2	3	4	5	6	7	8	9	#
␣ 0 Ґ Є І Ї ў	& ' ( ) * , - . / 1	А Б В Г 2	Д Е Ж З 3	И Й К Л 4	М Н О П 5	Р С Т У 6	Ф Х Ц Ч 7	Ш Щ Ъ Ы 8	Ь Э Ю Я 9	#

TG672xAL(en)_0125_ver011.pdf 42 2012/01/25 9:16:20

Error messages

Display message	Cause/solution
Base no power or **No link. Reconnect AC adaptor.** or **No link.**	● The handset has lost communication with the base unit. Move closer to the base unit and try again. ● Unplug the base unit's AC adaptor to reset the unit. Reconnect the adaptor and try again. ● The handset's registration may have been cancelled. Re-register the handset (page 30). ● When "**No link.**" is displayed during a power failure, place a handset on the base unit to supply power to the base unit.
Check Phone Line	● The supplied telephone line cord has not been connected yet or not connected properly. Check the connections (page 9).
Error	● Recording was too short. Try again.
Failed	● Phonebook copy failed (page 22). Confirm the other handset (the receiver) is in standby mode and try again.
Incomplete	● The receiver's phonebook memory is full. Erase the unwanted phonebook entries from the other handset (the receiver) and try again.
Memory Full	● The phonebook memory is full. Erase unwanted entries (page 21). ● Message memory is full. Erase unwanted messages (page 35, 36). ● The call barred list memory is full. Erase unwanted entries (page 29).
Use rechargeable battery.	● A wrong type of battery such as Alkaline or Manganese was inserted. Use only the rechargeable Ni-MH batteries noted on page 4, 6.
You must first subscribe to Caller ID.	● You must subscribe to a Caller ID service. Once you receive caller information after subscribing to a Caller ID service, this message will not be displayed.

TG672xAL(en)_0125_ver011.pdf 43 2012/01/25 9:16:20

Troubleshooting

If you still have difficulties after following the instructions in this section, disconnect the base unit's AC adaptor and turn off the handset, then reconnect the base unit's AC adaptor and turn on the handset.

General use

Problem	Cause/solution
The handset does not turn on even after installing charged batteries.	● Place the handset on the base unit or charger to turn on the handset.
The unit does not work.	● Make sure the batteries are installed correctly (page 9). ● Fully charge the batteries (page 9). ● Check the connections (page 9). ● Unplug the base unit's AC adaptor to reset the unit and turn off the handset. Reconnect the adaptor, turn on the handset and try again. ● The handset has not been registered to the base unit. Register the handset (page 30).
The handset display is blank.	● The handset is not turned on. Turn the power on (page 13).
I cannot hear a dial tone.	● Make sure that you are using the supplied telephone line cord. Your old telephone line cord may have a different wiring configuration. ● The base unit's AC adaptor or telephone line cord is not connected. Check the connections. ● Disconnect the base unit from the telephone line and connect the line to a known working telephone. If the working telephone operates properly, contact our service personnel to have the unit repaired. If the working telephone does not operate properly, contact your service provider/telephone company.
I cannot use the smart function key even if the smart function indicator is flashing slowly.	● Another unit is in use. Wait and try again later. ● The key lock feature is turned on. Turn it off (page 18).

Programmable settings

Problem	Cause/solution
The display is in a language I cannot read.	● Change the display language (page 14).
I cannot activate the eco mode.	● You cannot set eco mode when you set the repeater mode **"On"**. If required, set the repeater mode to **"Off"** (page 31).

TG672xAL(en)_0125_ver011.pdf 44 2012/01/25 9:16:20

Problem	Cause/solution
I cannot register a handset to a base unit.	• The maximum number of handsets (6) is already registered to the base unit. Cancel unused handset registrations from the base unit (page 30). • You entered the wrong PIN. If you forget your PIN, contact an authorised service centre.

Battery recharge

Problem	Cause/solution
The handset beeps and/or [battery] flashes.	• Battery charge is low. Fully charge the batteries (page 9).
I fully charged the batteries, but – [battery] still flashes or – the operating time seems to be shorter.	• Clean the battery ends (⊕, ⊖) and the charge contacts with a dry cloth and charge again. • It is time to replace the batteries (page 9).

Making/answering calls, intercom

Problem	Cause/solution
[antenna] is displayed.	• The handset is too far from the base unit. Move closer. • The base unit's AC adaptor is not properly connected. Reconnect AC adaptor to the base unit. • The handset is not registered to the base unit. Register it (page 30). • Activating one touch eco mode reduces the range of the base unit in standby mode. If required, turn eco mode off (page 15).
Noise is heard, sound cuts in and out.	• You are using the handset or base unit in an area with high electrical interference. Re-position the base unit and use the handset away from sources of interference. • Move closer to the base unit. • If you use a DSL/ADSL service, we recommend connecting a filter (contact your DSL/ADSL service provider) to the telephone line between the base unit and the telephone line socket. Contact your DSL/ADSL provider for details.
Sound quality seems to be getting worse.	• You have registered a handset that is not recommended (page 4). The clearest sound quality is only possible by registering the recommended handset.
The handset does not ring.	• The ringer volume is turned off. Adjust ringer volume (page 17). • Night mode is turned on. Turn it off (page 28).
The base unit does not ring.	• The ringer volume is turned off. Adjust ringer volume (page 25).
I cannot make a call.	• You dialled a call restricted number (page 29). • The key lock feature is turned on. Turn it off (page 18). • The unit is not designed to be used with rotary/pulse dialling services.

TG672xAL(en)_0125_ver011.pdf 45 2012/01/25 9:16:21

Caller ID

Problem	Cause/solution
Caller information is not displayed.	● You must subscribe to a Caller ID service. Contact your service provider/telephone company for details. ● If your unit is connected to any additional telephone equipment, remove and plug the unit directly into the wall socket. ● If you use a DSL/ADSL service, we recommend connecting a filter (contact your DSL/ADSL service provider) to the telephone line between the base unit and the telephone line socket. Contact your DSL/ADSL provider for details. ● Other telephone equipment may be interfering with this unit. Disconnect the other equipment and try again.
Caller information is slow to display.	● Depending on your service provider/telephone company, the unit may display the caller's information at the 2nd ring or later. Set the first ring to **"Off"** (page 25). ● Move closer to the base unit.
Time on the unit has shifted.	● Incorrect time information from incoming Caller ID changes the time. Set the time adjustment to **"Manual"** (off) (page 24).
The name stored in the phonebook is not fully displayed while an outside call is being received.	● Edit the phonebook entry name to fit in 1 line of text (page 21).

Answering system

Problem	Cause/solution
The unit does not record new messages.	● The answering system is turned off. Turn it on (page 34). ● The message memory is full. Erase unwanted messages (page 35). ● The recording time is set to **"Greeting Only"**. Change the setting (page 38). ● If you subscribe to a voice mail service, messages are recorded by your service provider/telephone company, not your telephone. Change the unit's number of rings setting or contact your service provider/telephone company (page 37).
I cannot operate the answering system remotely.	● The remote access code is not set. Set the remote access code (page 36). ● You are entering the wrong remote access code. If you have forgotten your remote access code, enter the remote access code setting to check your current code (page 36). ● The answering system is turned off. Turn it on (page 37).

TG672xAL(en)_0125_ver011.pdf 46 2012/01/25 9:16:21

Liquid damage

Problem	Cause/solution
Liquid or other form of moisture has entered the handset/base unit.	● Disconnect the AC adaptor and telephone line cord from the base unit. Remove the batteries from the handset and leave to dry for at least 3 days. After the handset/base unit are completely dry, reconnect the AC adaptor and telephone line cord. Insert the batteries and charge fully before use. If the unit does not work properly, contact an authorised service centre.

Caution:

- To avoid permanent damage, do not use a microwave oven to speed up the drying process.

TG672xAL(en)_0125_ver011.pdf 47 2012/01/25 9:16:21

Index

A Additional handsets: *30*
Alarm: *27*
Answering calls: *17*
Answering system: *34*
Call screening: *34*
Erasing messages: *35*, *36*, *37*
Greeting message: *34*
Greeting only: *38*
Listening to messages: *35*, *37*
Number of rings: *37*
Recording time: *38*
Remote access code: *36*
Remote operation: *36*
Turning on/off: *34*, *36*, *37*
Area code: *29*
Auto talk: *17*, *25*

B Battery: *9*, *10*

C Call restriction: *29*
Call share: *18*
Call waiting and Caller ID compatible: *32*
Caller ID service: *32*
Caller list: *32*
Caller list edit: *33*
Chain dial: *21*
Character entry: *41*
Conference calls: *40*
Control type: *11*

D Date and time: *14*
Direct command code: *23*
Display
Contrast: *25*
Language: *14*

E Eco mode: *15*
Equalizer: *18*
Error messages: *43*

F First ring: *25*

H Handset
Deregistration: *30*
Locator: *40*
Name: *28*
Registration: *30*
Hold: *18*

I Incoming call barring: *29*
Intercom: *40*

K Key lock: *18*
Keytones: *25*

M Making calls: *17*
Missed calls: *32*
Mute: *18*

N Night mode: *28*

P Pause: *17*
Phonebook: *21*
PIN: *30*
Power failure (power back-up operation): *19*
Power on/off: *13*
Privacy mode: *26*

R Recall/flash: *18*
Redialling: *17*
Repeater: *31*
Ringer tone: *25*

S Smart function key (Top key): *14*
Speakerphone: *17*

T Time adjustment: *24*
Transferring calls: *40*
Troubleshooting: *44*

V Voice mail: *39*
Volume
Receiver: *17*
Ringer (Base unit): *25*
Ringer (Handset): *17*, *25*
Speaker: *17*

W Wall mounting: *15*

TG672xAL(en)_0125_ver011.pdf 48 2012/01/25 9:16:21

TG672xAL(en)_0125_ver011.pdf 49 2012/01/25 9:16:21

Notes

TG672xAL(en)_0125_ver011.pdf 50 2012/01/25 9:16:21

TG672xAL(en)_0125_ver011.pdf 51 2012/01/25 9:16:21

For your future reference
We recommend keeping a record of the following information to assist with any repair under warranty.

Serial No.	Date of purchase
(found on the bottom of the base unit)	
Name and address of dealer	

Attach your purchase receipt here.

Customer Care Centre Tel. No.: 132600
or website www.panasonic.com.au

N52

Sales Department:
Panasonic Australia Pty. Limited

1 Innovation Road, Macquarie Park NSW 2113, Australia

Panasonic System Networks Co., Ltd.
1-62, 4-chome, Minoshima, Hakata-ku, Fukuoka 812-8531, Japan

© Panasonic System Networks Co., Ltd. 2012

TG6721AL

PNQX5138ZA TT0212YK0 (A)