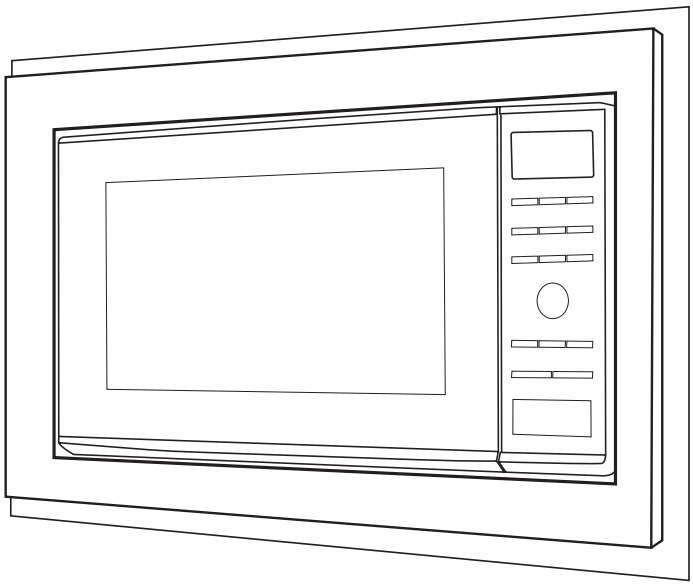

Installation Instruction

NN-TK510FS/FW/FB

	Trim kit
24”cabinet (596mm)	NN-TK510FS NN-TK510FW NN-TK510FB

Contents

Attention P2
Step1. Unpacking list.....P2
Step2. Feature diagram.....P3
Step3. Cabinet Preparation P4-6
Step4. Microwave Oven Installation P7
Step5. Cabinet Installation..... P8-9
Step6. Finishing Installation..... P10-back cover

Panasonic

1. This trim kit can be installed into a cabinet. The cabinet opening must have the following internal dimensions as shown on **page 4-6**.

   A vent is required at the rear of the cabinet, it should not be obstructed.

2. Electrical Connections The appliance is supplied with a mains plug attached and should only be connected into an earthed socket that has been installed according to the relevant safety regulations.
   If the plug is no longer accessible after the appliance has been built into the cabinet, a dual pole isolator must be installed to conform to the relevant safety standards.
3. It is essential that the cabinet is fixed to the wall for stability. The shelf must be able to support a weight of 30 kg.
4. If the microwave oven is to be removed from the kitchen cabinet and used free standing, the built in parts must be removed, and the oven returned to its original condition. Keep these installation instructions for future reference so the installation process can be reversed.

TAKE CARE NOT TO KINK OR TRAP THE MICROWAVE ELECTRICAL CABLE.

The diagram may vary from the actual unit and is only for your reference.

Step1. Unpacking list

Tools Needed

- Measuring tape
- Pencil
- Driver
- Ø2 drill

Parts Supplied

PART		QUANTITY
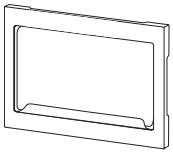	Trim Frame	1
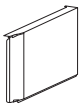	Right Duct	1
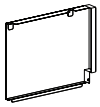	Left Duct	1
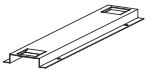	Rail	2
	Bracket	4
	Catch	4
	Tape	4
	Screw	12
	Strike	4

Step2. Feature diagram

Installed Image

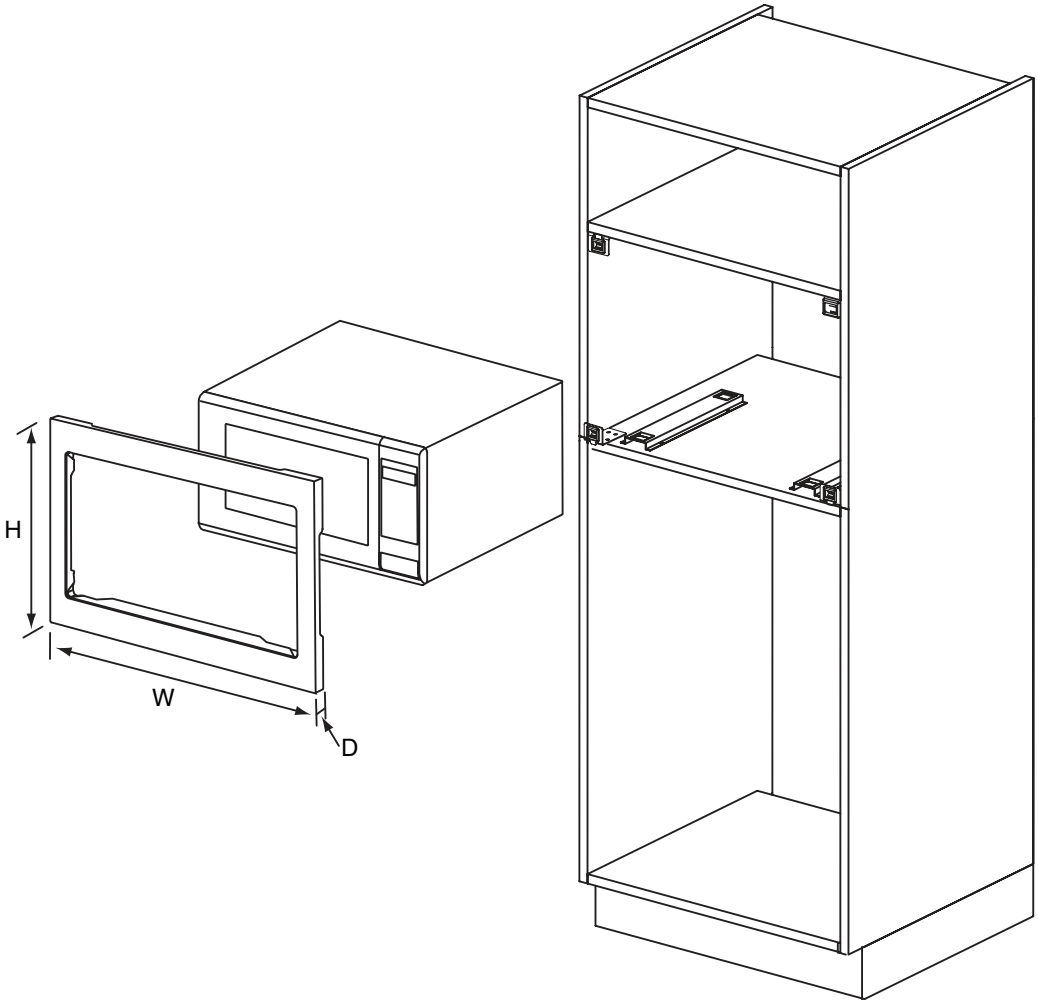

	Trim kit Dimensions
Width	596 mm
Height	410 mm
Depth	20 mm (Thickness)

Step3. Cabinet Preparation

Please confirm and select the type of your own cabinet firstly.
Diagram in fig 1. illustrates above bench installation. For under bench installation illustrated in diagram in fig 2., same opening dimensions requirements apply.

Type1

fig 1.

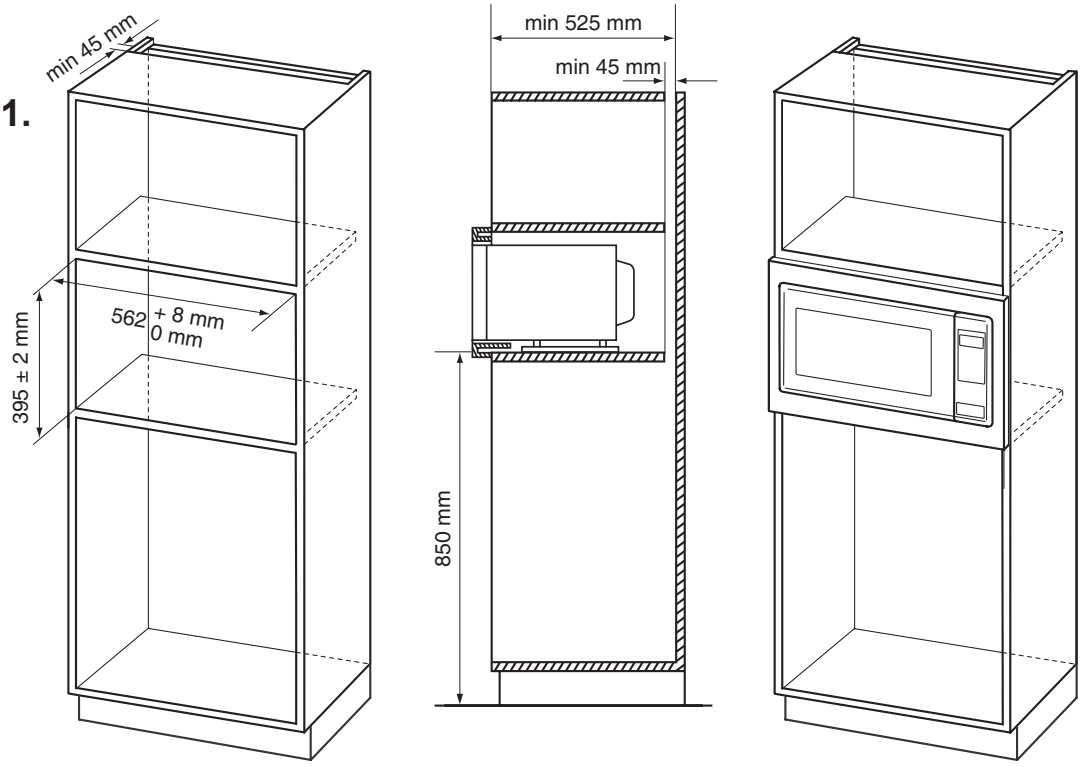

fig 2.

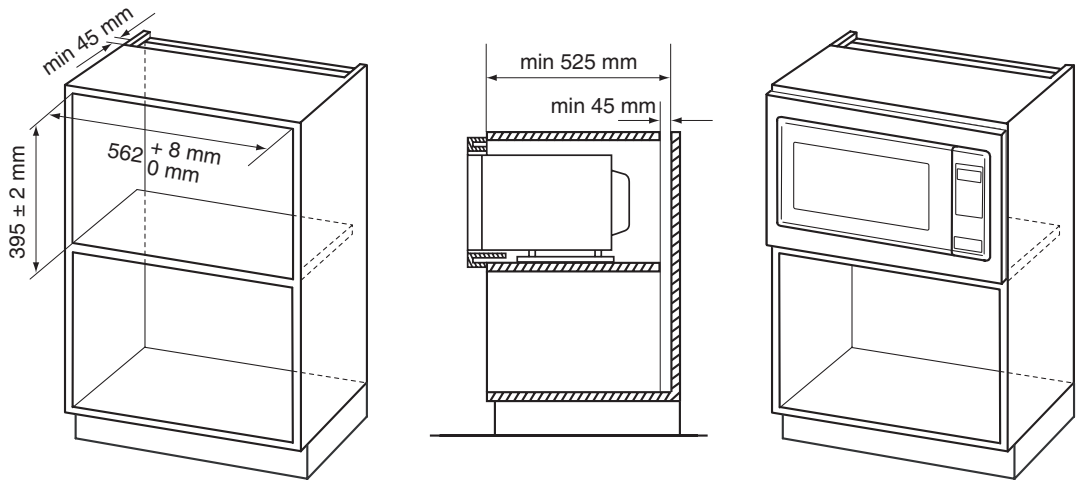

Step3. Cabinet Preparation

Type2

fig 1.

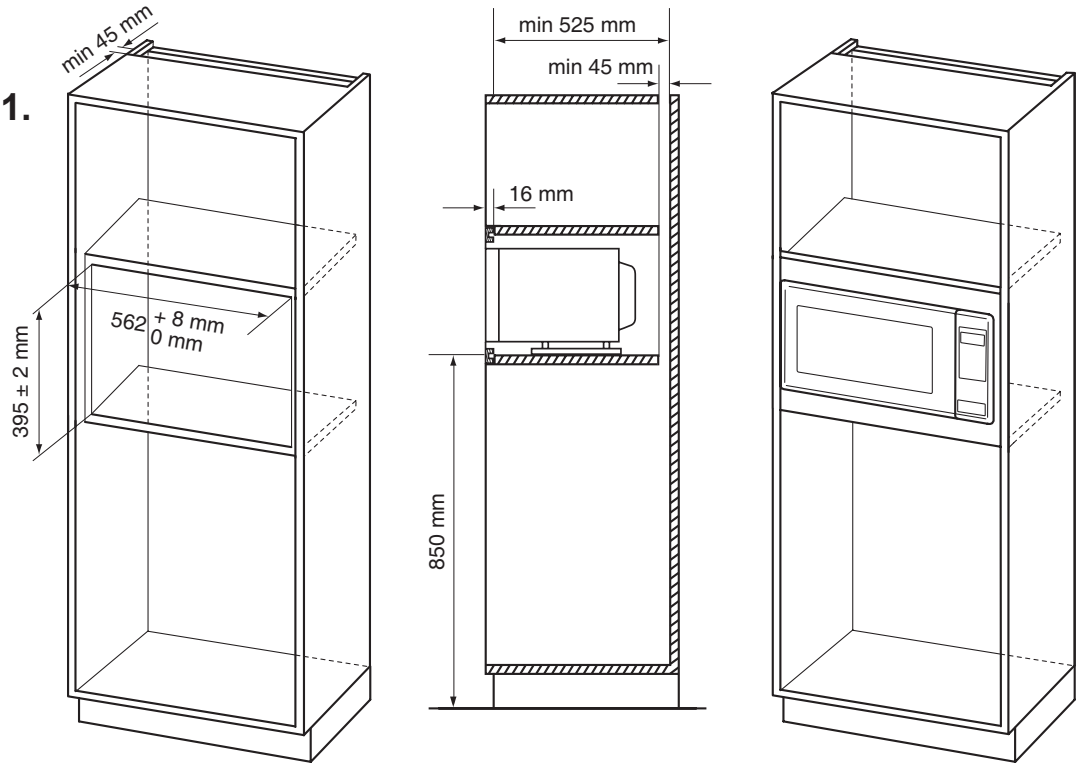

fig 2.

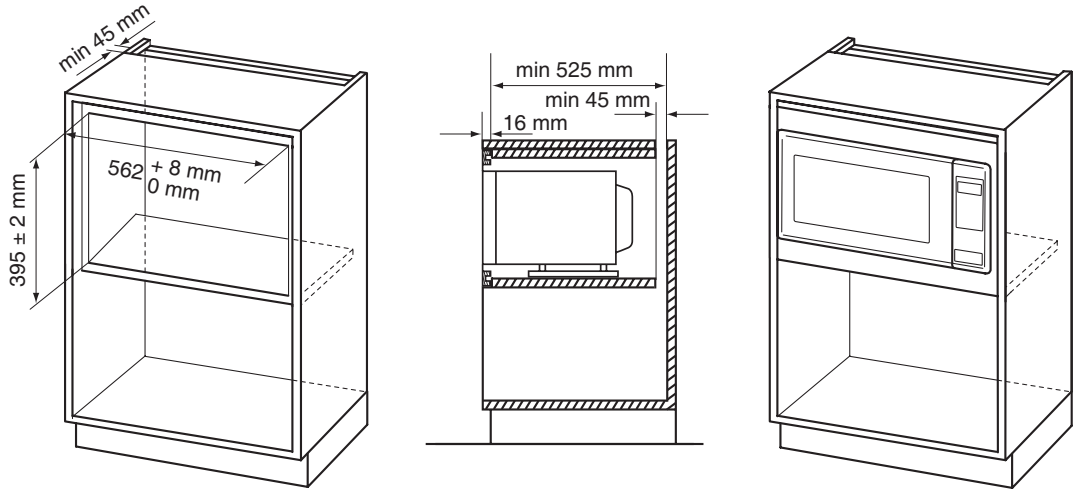

Step3. Cabinet Preparation

Type3

fig 1.

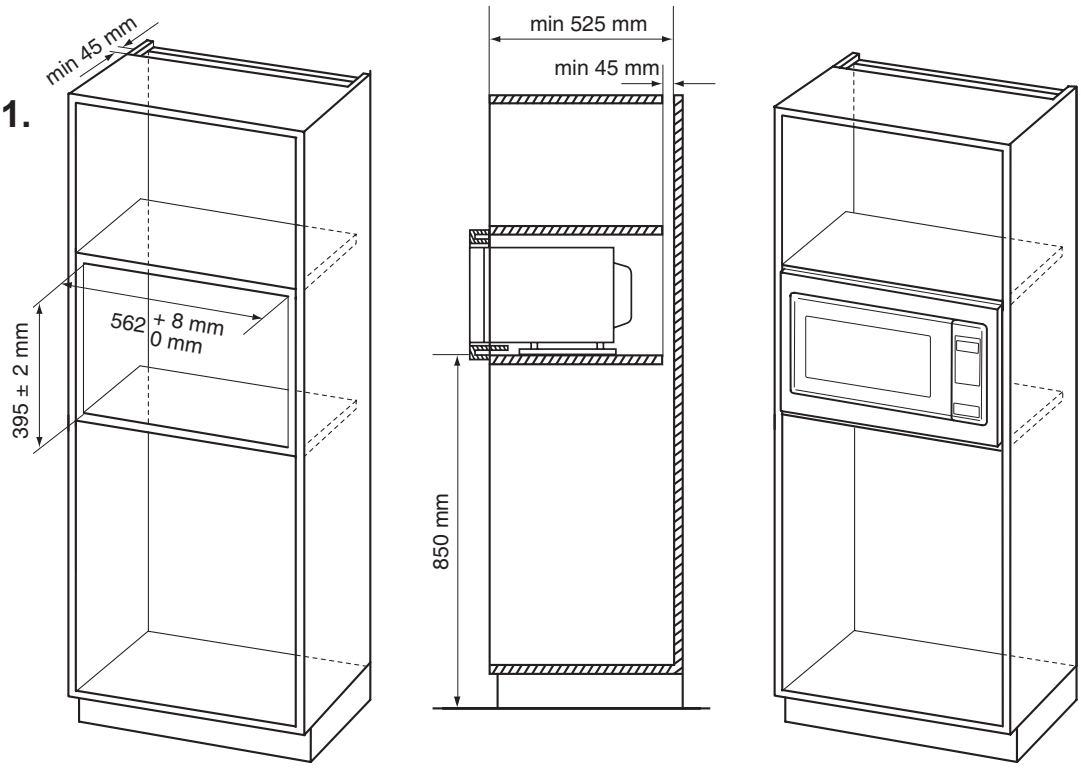

fig 2.

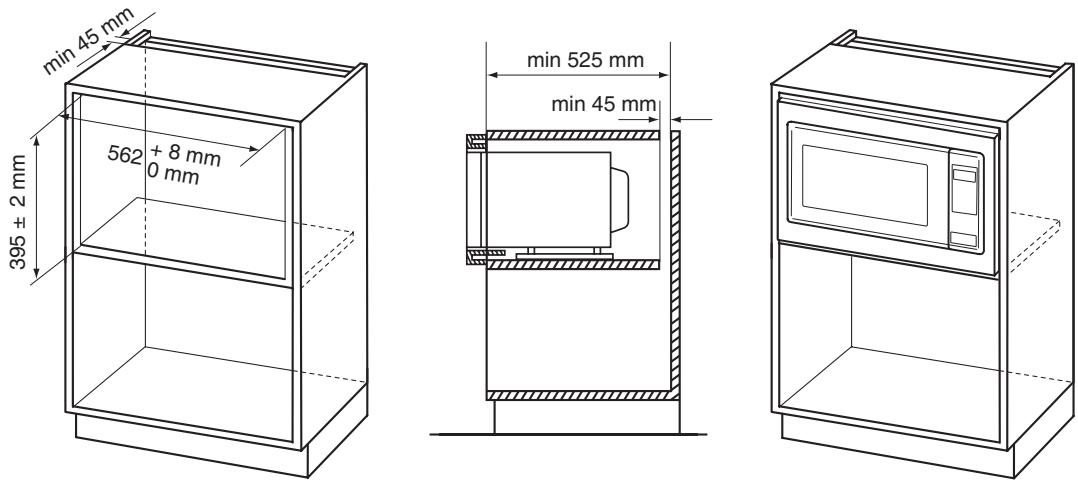

Step4. Microwave Oven Installation

1.

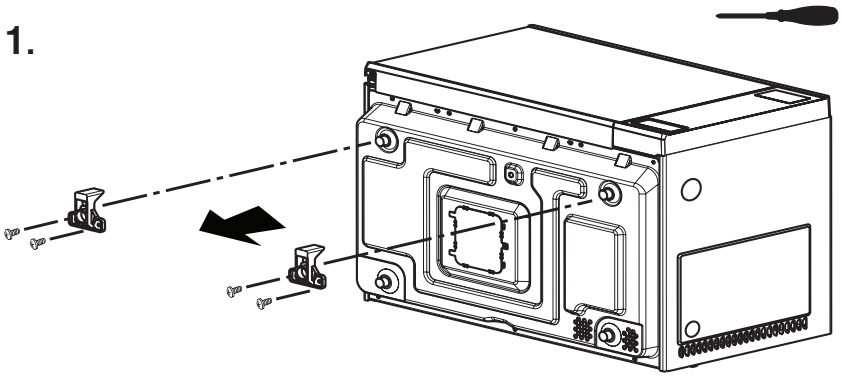

2.

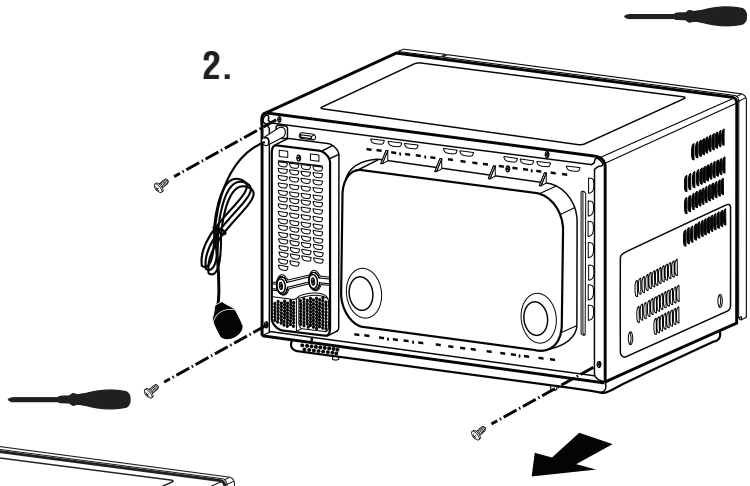

3.

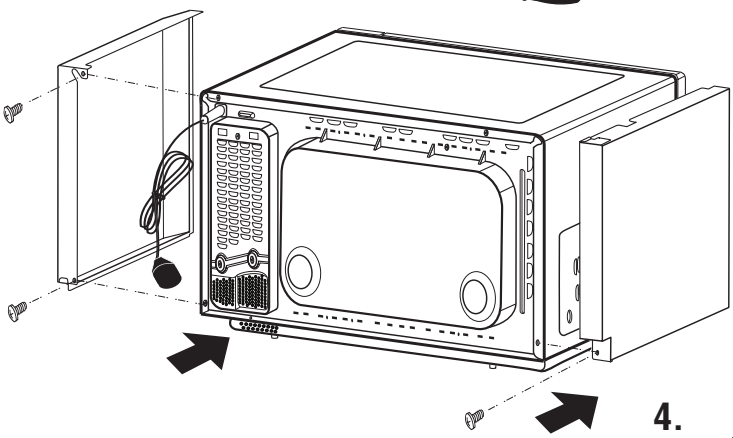

4.

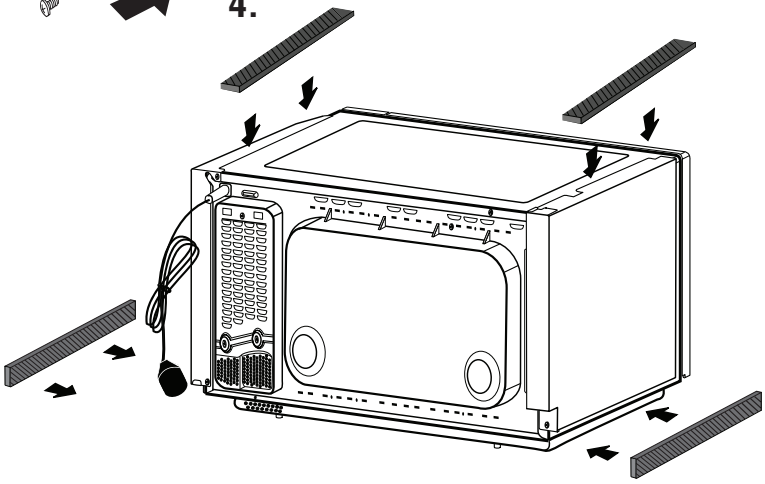

Step5. Cabinet Installation

1.

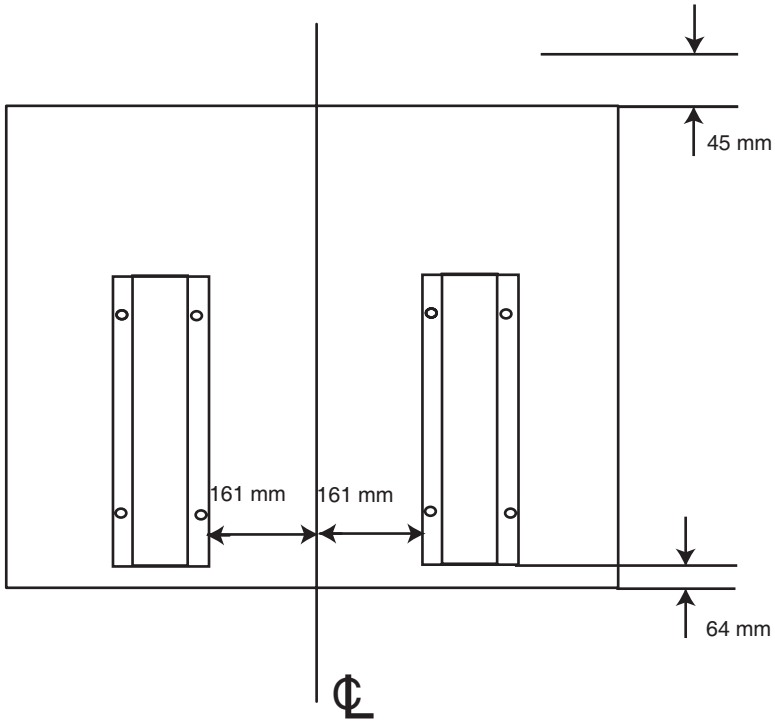

2.

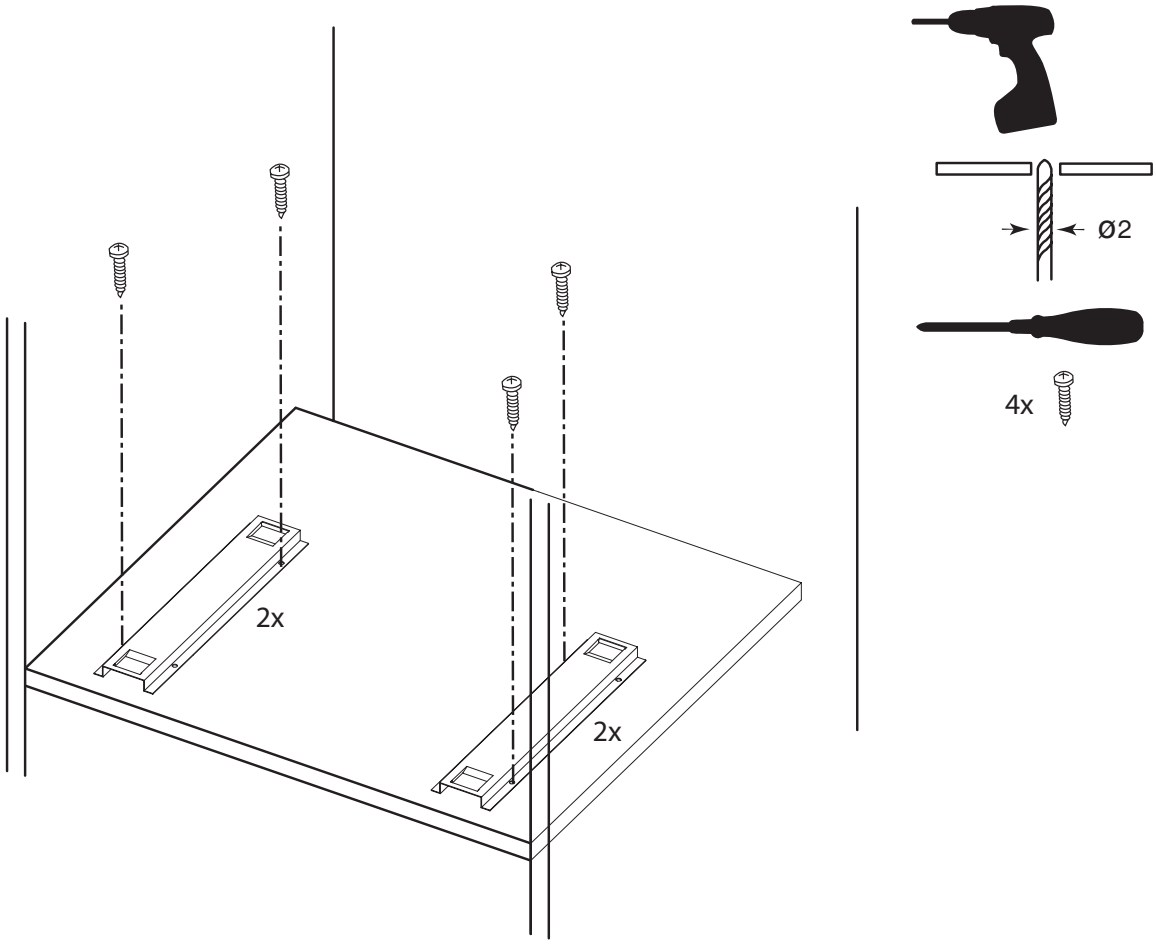

Step5. Cabinet Installation

3.

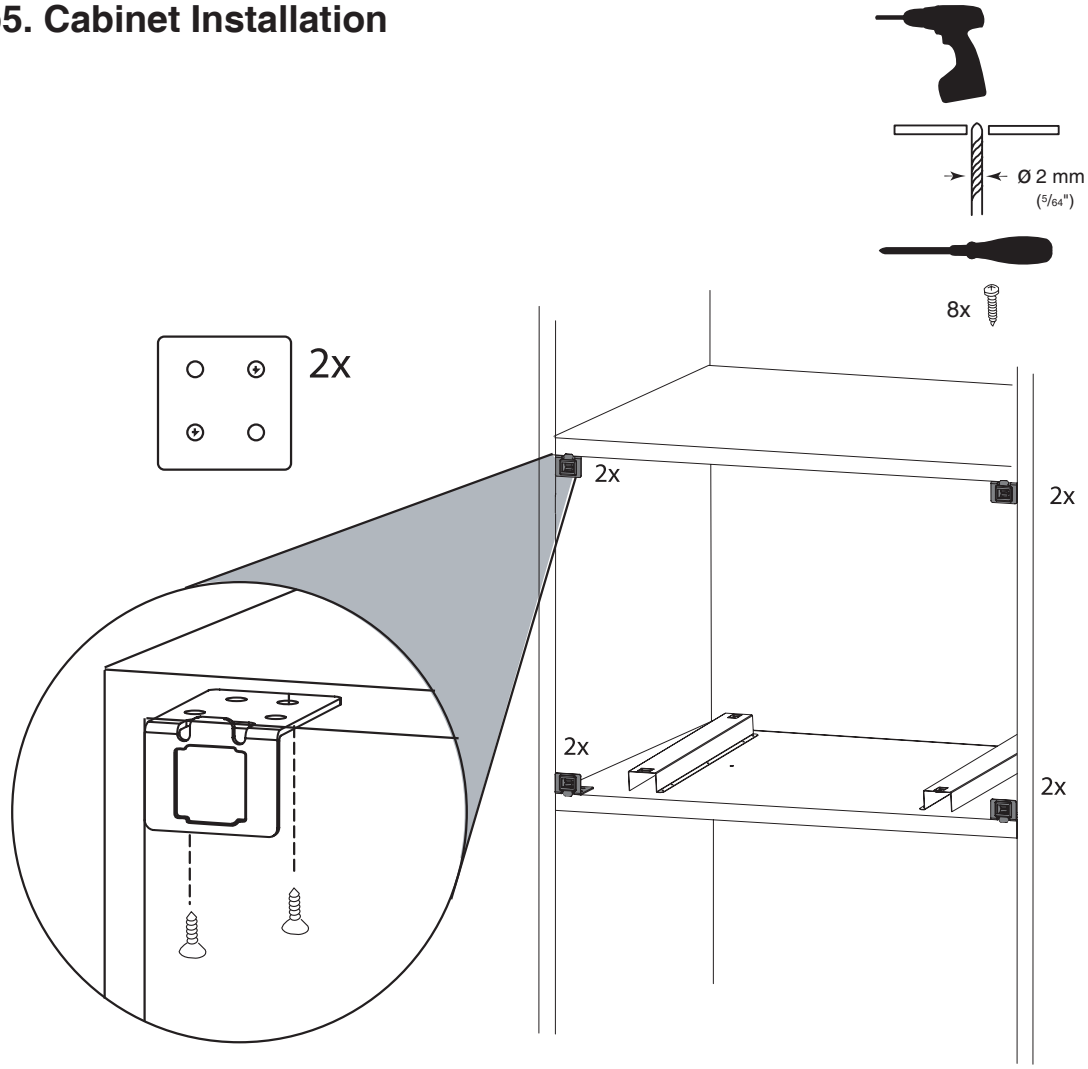

4.

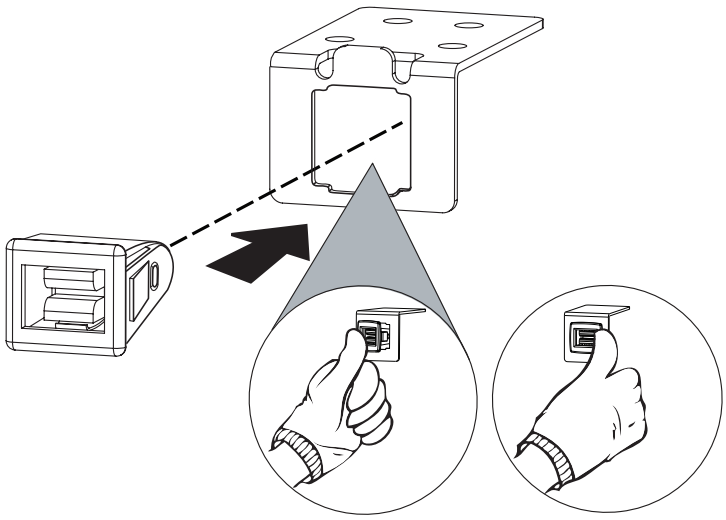

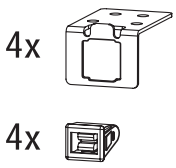

Step6. Finishing Installation

Trim Frame

1.

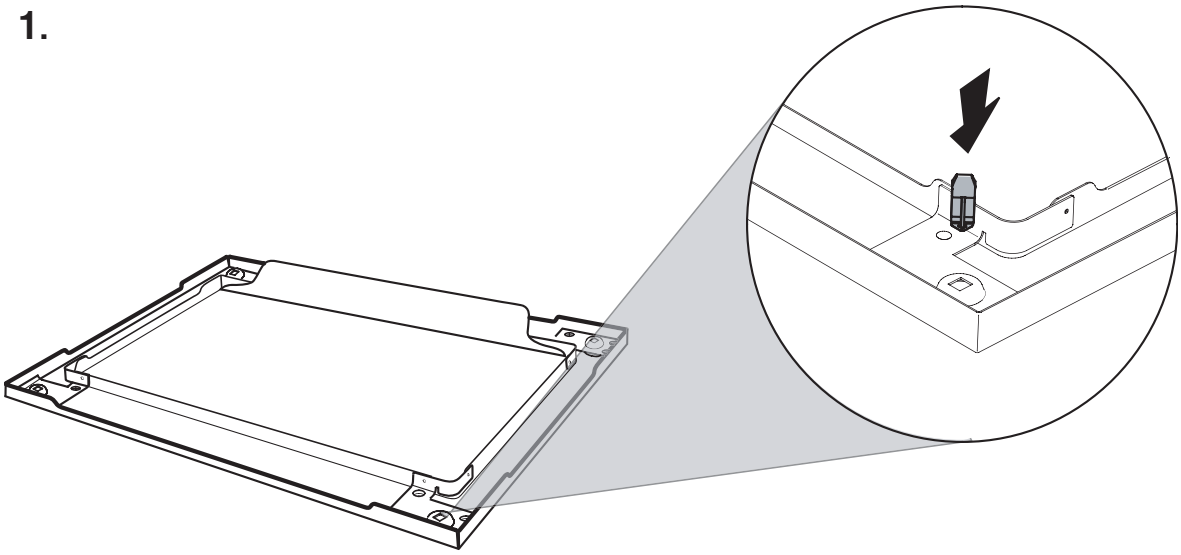

2.

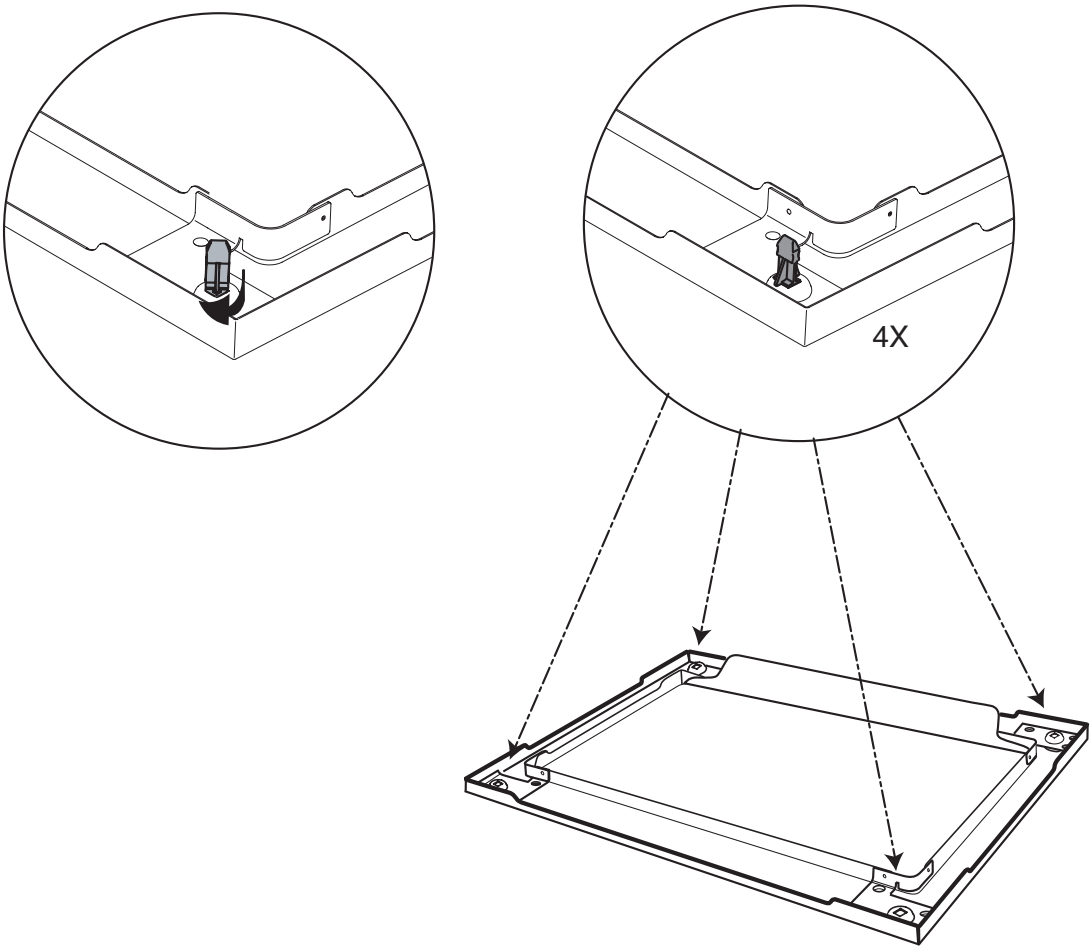

Step6. Finishing Installation

Complete Confirm

3.

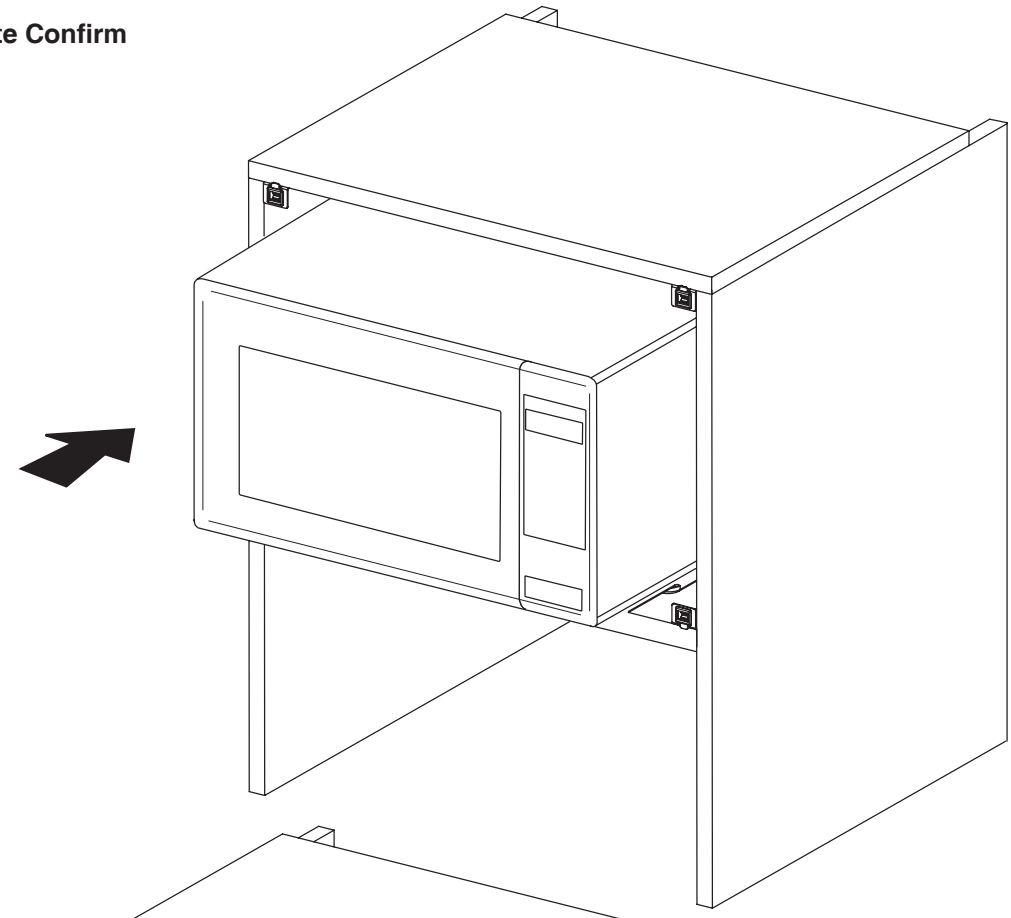

4.

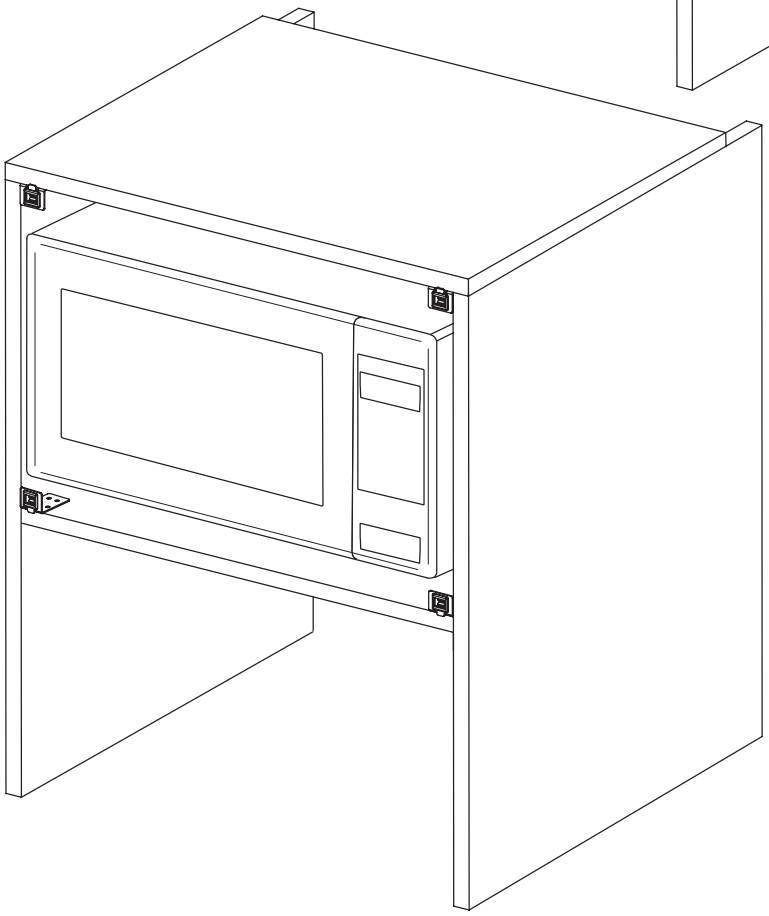

Step6. Finishing Installation

Complete Confirm

5.

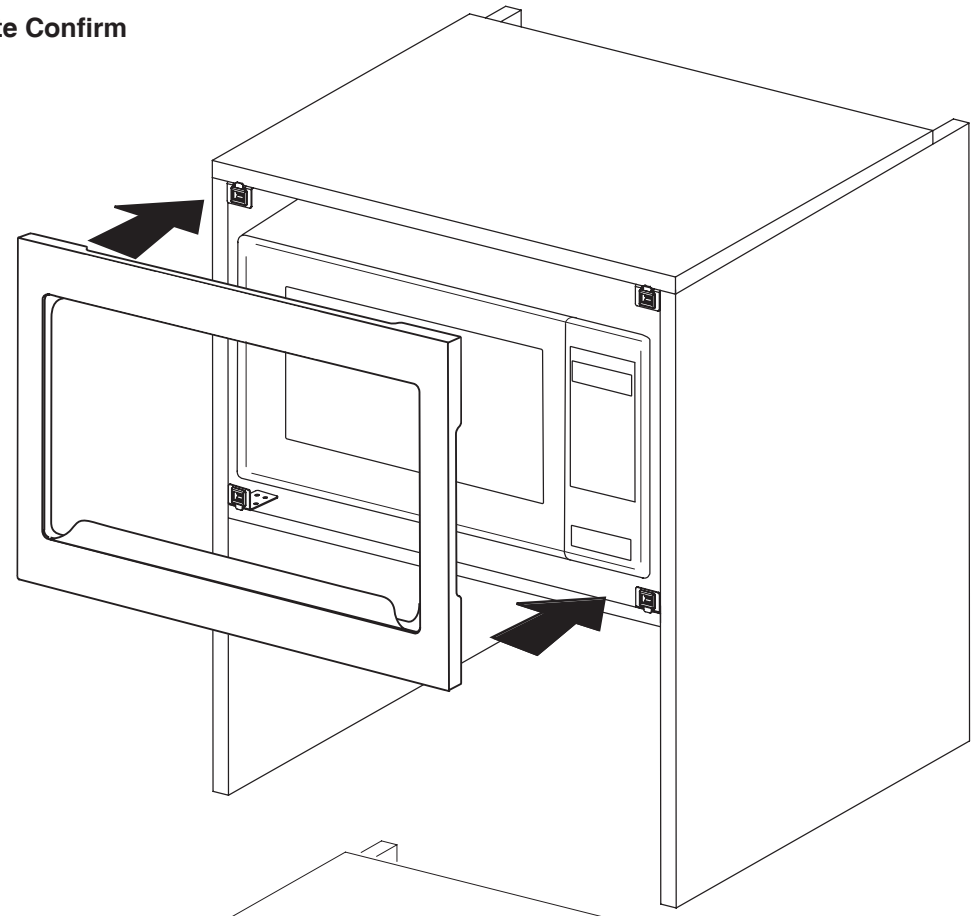

6.

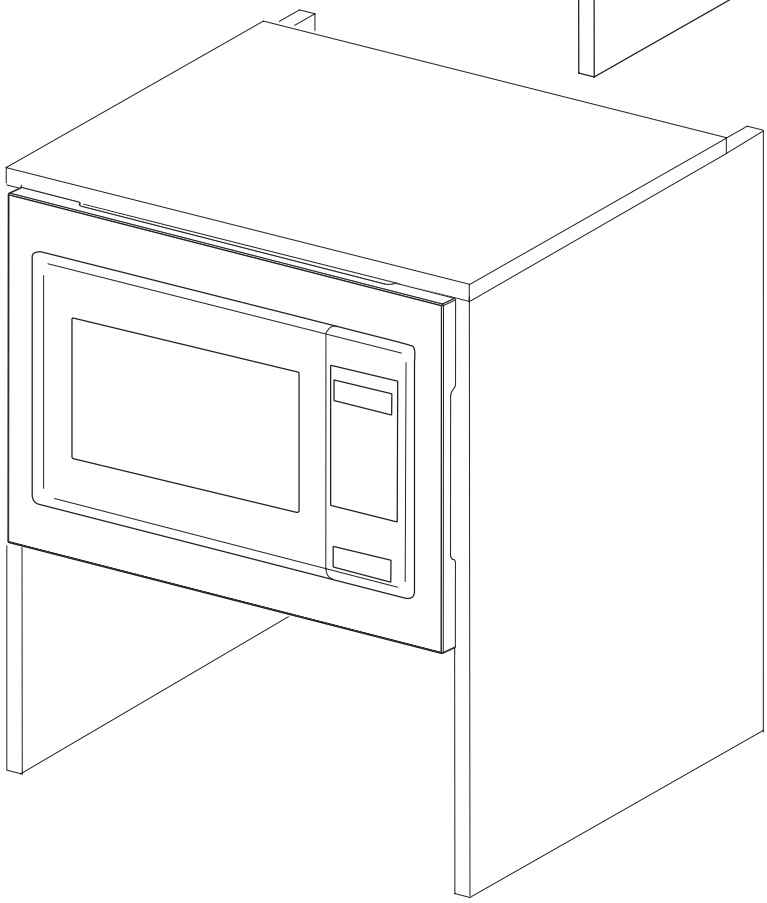

F03139P21QP
PA0624-11025
Printed in China