sunvolt

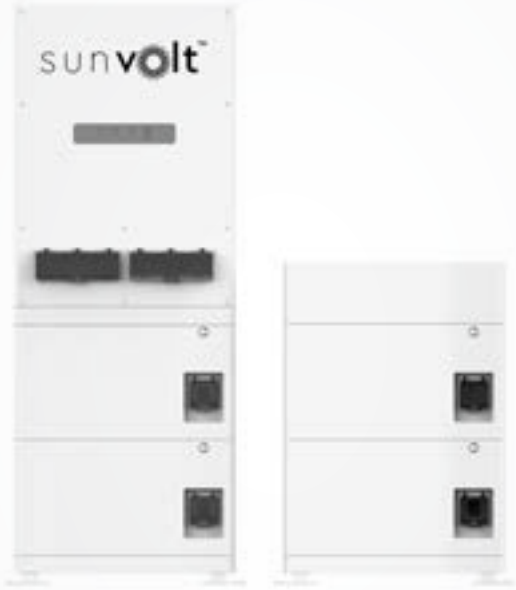

User Manual

Rechargeable Lithium Ion Battery System

V1.0-2023-10-10

CONTENTS

1 About This Manual 1
1.1 Applicable Model 1
1.2 Target Audience 1
1.3 Symbol Definition 1
2 Safety Precaution 2
2.1 General Safety 2
2.2 System Safety 2
2.3 Battery Safety 4
2.4 Emergency Measures 5
3 Product Introduction 6
3.1 Appearance 6
4 Check and Storage 7
4.1 Check Before Receiving 7
4.2 Deliverables 7
4.3 Storage 8
5 Installation 8
5.1 Environment Requirements 8
5.2 Installing the Battery and the Cabinet 10
6 Electrical Connection 12

7 Power On and Off 15
7.1 Check Before Power ON 15
7.2 System Power On 15
7.3 Battery Indicator Status 15
7.4 System Power Off 15
7.5 Routine Maintenance 16
7.6 Setting Parameters via SolarGo App 16
8 Technical Parameters 17

1 About This Manual

This manual describes the Sunvolt all-in-one system (hereinafter referred to as the System) in terms of the introduction, installation, commission, maintenance. Read through this manual before installing and operating the product. All installers and users have to be familiar with the product features, functions, and safety precautions.

1.1 Applicable Model

This manual applies to the listed products:

GOODWE	SUNVOLT LV ESS
LXS U5.4-A20	SV-R30-BATTERY-S5.4
LXS U10.8-A20	SV-R30-BATTERY-S10.8

1.2 Target Audience

This manual applies to trained and knowledgeable technical professionals only. The technical personnel has to be familiar with the product, local standards, and electric systems.

1.3 Symbol Definition

Different levels of warning messages in this manual are defined as follows:

⚠ DANGER
Indicates a high-level hazard that, if not avoided, will result in death or serious injury.
⚠ WARNING
Indicates a medium-level hazard that, if not avoided, could result in death or serious injury.
⚠ CAUTION
Indicates a low-level hazard that, if not avoided, could result in minor or moderate injury.
NOTICE
Highlights key information and supplements the texts. Or some skills and methods to solve product-related problems to save time.

Updates

The latest document contains all the updates made in earlier issues.

V1.0 2023-10-10
- First Issue.

2 Safety Precaution

Please strictly follow these safety instructions in the user manual during the operation.

NOTICE

The System is designed and tested to strictly comply with related safety rules. Read and follow all the safety instructions and cautions before any operations. Improper operation might cause personal injury or property damage as the System are electrical equipment.

2.1 General Safety

NOTICE

- The information in this user manual is subject to change due to product updates This guide cannot replace the product labels or the safety precautions in the user manual unless otherwise specified. All descriptions here are for guidance only.
- Before installations, read through the user manual to learn about the System and the precautions.
- All operations should be performed by trained and knowledgeable technicians who are familiar with local standards and safety regulations.
- Use insulating tools and wear personal protective equipment when operating the System to ensure personal safety. Wear anti-static gloves, cloths, and wrist strips when touching electronic devices to protect the System from damage.
- Strictly follow the installation, operation, and configuration instructions in this guide and user manual. The manufacturer shall not be liable for System damage or personal injury if you do not follow the instructions.

2.2 System Safety

DANGER

- Strictly comply with local laws, regulations, and industry standards when installing and operating the equipment.
- Strictly follow all safety precautions outlined in this manual, the inverter user manual and safety labels on the equipment when operating the equipment.
- The energy storage system is heavy. Please use appropriate equipment and tools and take protective measures during installation and maintenance. Improper operation may cause personal injury or equipment damage.
- To protect the battery pack and its components from damage during transportation, please ensure that the transportation personnel are professionally trained. All operations during the transportation have to be recorded. The equipment shall be kept in balance to avoid falling down.
- Install the equipment on a level, firm, flat and dry foundation with sufficient bearing capacity. It is prohibited to install the equipment on the ground with depressions or slopes.
- All labels and warning marks should be visible after the installation.
- Do not cover, scrawl, or damage any label on the System.
- Before operating the equipment, ensure that the equipment is not damaged and the system is faultless, otherwise there may be a risk of electric shock and catching fire.
- Ensure that all switches of the equipment are disconnected before installation, wiring, or maintenance.

DANGER

- Ensure that the system is reliably grounded before operating the equipment. Otherwise an electric shock may occur.
- Do not open the upper cabinet cover or touch any wiring terminals or components when the equipment is running. Otherwise an electric shock may occur.
- Do not place the battery in a high temperature environment. Make sure that there is no direct sunlight and no heat source near the battery. When the ambient temperature exceeds 60 , it may cause fire.
- Do not touch the cabinet before it cools down as the temperature of the cabinet may exceed 60 during equipment operation. Do not install the equipment in a place that non professionals can easily touch.
- Do not disassemble, modify, or replace any part of the equipment without official authorization from the manufacturer. Otherwise, it may cause damage to the equipment, which shall not be borne by the manufacturer.

DANGER

- All labels and warning marks should be visible after the installation. Do not cover, scrawl, or damage any label on the System.
- Warning labels on the System are as follows:

Upper Cabinet Label Description

	Potential risks exist. Wear proper PPE before any operations.		Delayed discharge. Wait 5 minutes after power off until the components are completely discharged.
	Read through the user manual before any operations.		High-temperature hazard. Do not touch the product under operation to avoid being burnt.
	CE Mark		Do not dispose of the inverter as household waste.Discard the product in compliance with local laws and regulations, or send it back to the manufacturer.
	RCM Mark.		Grounding point.

Battery Label Description

	HIGH VOLTAGE HAZARD High voltage exists when the System is running. Disconnect all incoming power and turn off the System before working on it.		Potential risks exist. Wear proper Personnel Protective Equipment before any operations.
	Read through the user manual before any operations.		Be careful of fire.
	Grounding point.		Do not dispose of the System as household waste. Deal with it in compliance with local laws and regulations, or send it back to the manufacturer.
	RCM Mark.	-	-

2.3 Battery Safety

WARNING

- Ensure that the System has been powered off to avoid the risk of electric shock before operating the device in the system. Strictly follow all safety precautions outlined in this manual and safety labels on the System when operating it.
- Do not disassemble, modify, or replace any part of the battery without official authorization from the manufacturer. Otherwise, it may cause electrical shock
  or damages to the System for which the manufacturer shall not be held responsible.
- Do not hit, pull, drag, squeeze or step on the battery or put the battery into fire. Otherwise, the battery may explode.
- Do not place the battery in a high temperature environment. Make sure that there is no direct sunlight and no heat source near the battery. When the ambient temperature exceeds 60 , it may cause fire.
- Do not use the battery module if it is defective, broken, or damaged. Damaged battery modules may leak electrolyte.
- To protect the battery pack and its components from damage during transportation, please ensure that the transportation personnel are professionally trained. All operations during the transportation have to be recorded. The equipment shall be kept in balance to avoid falling down.
- Consider the weight of the equipment before moving it. Assign enough personnel to move the equipment to avoid personal injury.
- Contact after-sale service immediately if the battery is not able to be started. Otherwise, the battery might be damaged permanently.
- Do not move the battery when it is working. Contact after-sales service if the battery shall be replaced or added.

2.4 Emergency Measures

Battery Electrolyte Leakage

If the battery module leaks electrolyte, avoid contact with the leaking liquid or gas. The electrolyte is corrosive. It will cause skin irritation or chemical burn to the operator. Anyone contact the leaked substance accidentally has to do as following:

- Breath in the leaked substance: Evacuate from the polluted area, and seek immediate medical assistance.
- Eye contact: Rinse your eyes for at least 15 minutes with clean water and seek immediate medical assistance.
- Skin contact: Thoroughly wash the touch area with soap and clean water, and seek immediate medical assistance.
- Ingestion: Induce vomiting, and seek immediate medical assistance.

Fire

- The battery may explode when the ambient temperature exceeds 150 . Poisonous and hazard gas may be released if the battery is on fire.
- In the event of a fire, please make sure that the carbon dioxide extinguisher or Novec1230 or FM-200 is nearby.
- The fire cannot be put out by water or ABC dry powder extinguisher. Firefighters are required to wear full protective clothing and self-contained breathing apparatus.

3 Product Introduction

3.1 Appearance

Battery Parts

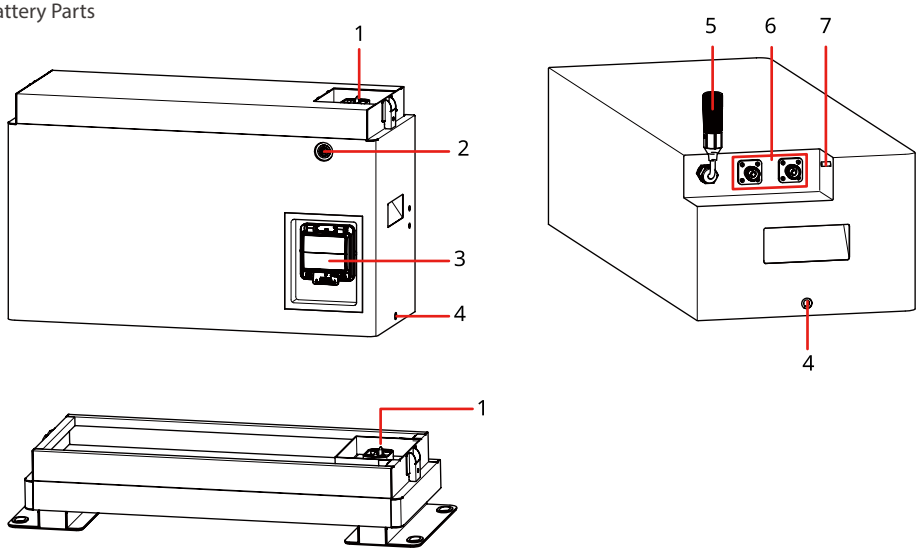

1. Blind-mate onnector
2. Button indicator
3. Circuit breaker
4. Screw hole
5. Communication terminal
6. Power terminal
7. PE terminal

Dimensions

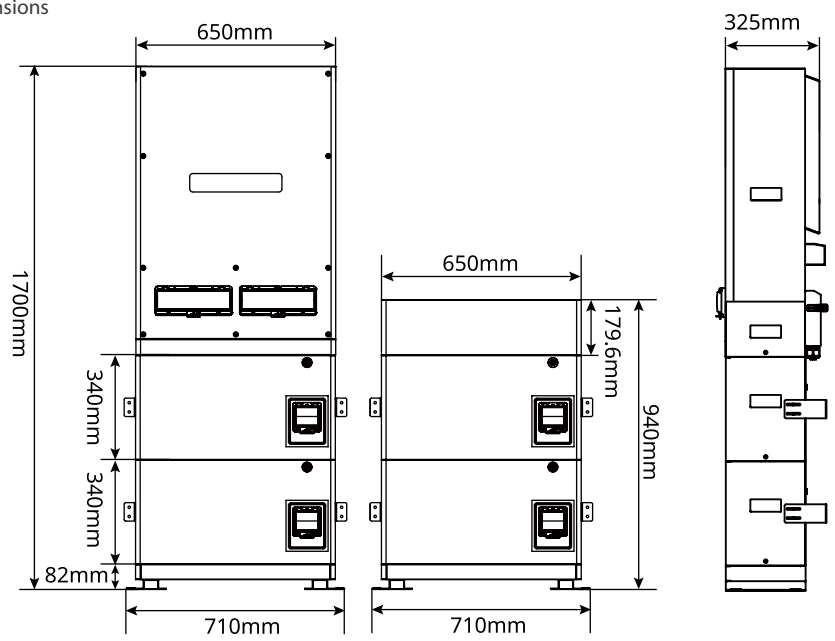

4 Check and Storage

4.1 Check Before Receiving

Check the following items before receiving the product.

1. Check the outer packing box for damage, such as holes, cracks, deformation, and other signs of equipment damage. Do not unpack the contents from the box and contact the supplier as soon as possible if any damage is found.
2. Check the System model. If the model is not what you requested, do not unpack it and contact the supplier.
3. Check the deliverables for correct model, complete contents, and intact appearance. Contact the supplier as soon as possible if any damage is found.

4.2 Deliverables

Battery

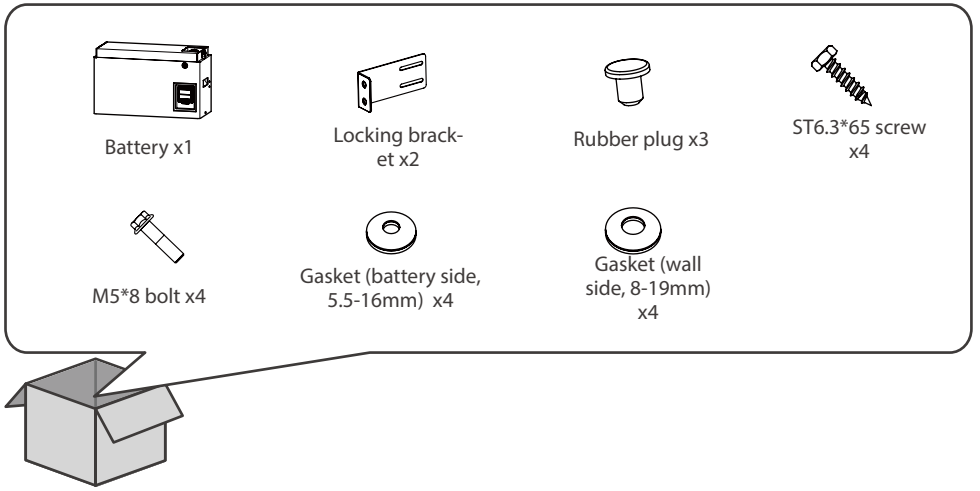

Extended battery

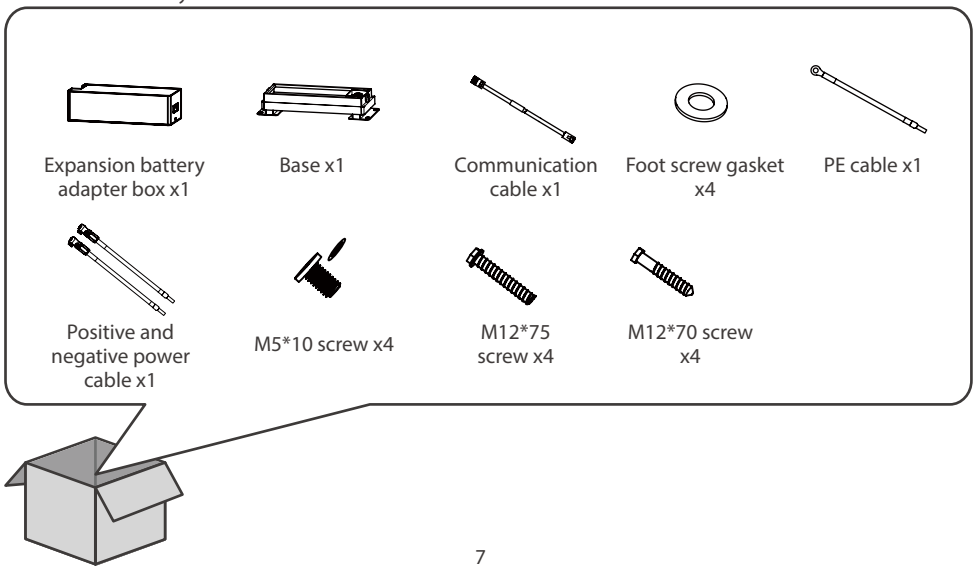

4.3 Storage

If the equipment is not to be installed or used immediately, please ensure that the storage environment meets the following requirements:

1. Do not unpack the outer package or throw the desiccant away.
2. Complete the equipment installation in three days after unpacking it. Pack and store the equipment using the original packing box if it is not installed.
3. Keep the equipment away from flammable, explosive, and corrosive matters.
4. Place the equipment in a cool place where away from direct sunlight.
5. Store the equipment in a clean place. Make sure the temperature and humidity are appropriate and no condensation.
6. Storage SOC: 30%~40% SOC. Circle the charge-discharge every 6 months.
7. Storage temperature (T):
   - When -20 ≤T<0 , the storage period cannot exceed 1 month.
   - When 0 ≤T≤35 , the storage period cannot exceed 1 year.
   - When 35 <T≤45 , the storage period cannot exceed 1 month.
8. Recommended storage humidity: 0%~95%RH (no condensation). Do not install the battery system if there is any moisture or condensation.

5 Installation

5.1 Environment Requirements

Installation Environment Requirements

1. Do not install the System in a place near flammable, explosive, or corrosive materials.
2. The System should be installed away from environments where toxic and harmful gases are concentrated.
3. Do not install the System in a place that is easy to touch, especially within non professionals' reach. High temperature exists when the System is working. Do not touch the surface to avoid burning.
4. Install the System in a sheltered place to avoid direct sunlight, rain, and snow. Build a sunshade if it is needed.
5. The place to install the System shall be well-ventilated for heat dissipation and large enough for operations.
6. The ingress protection rating of the System meets the requirements for indoor and outdoor installation. The temperature and humidity at the installation site should be within the appropriate range.
7. The installation location should be convenient for operation and maintenance, ensuring that the equipment indicator lights and all labels are easy to view.
8. The altitude to install the equipment shall be lower than the maximum working altitude 2000m.
9. Install the equipment away from electromagnetic interference. If there is any radio or wireless communication equipment below 30MHz near the System, make sure that the System is at least 30m far away from the wireless equipment.

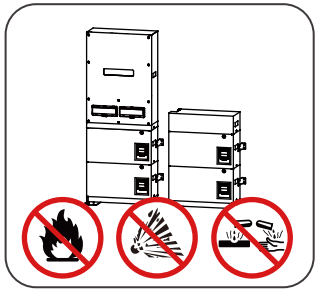



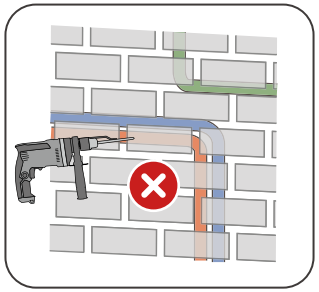

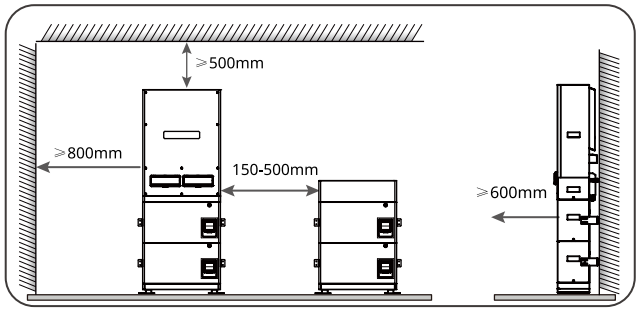

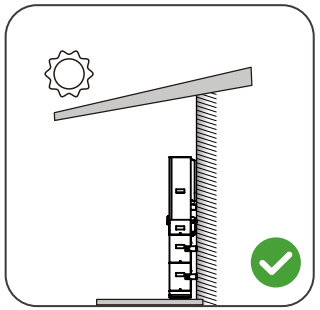

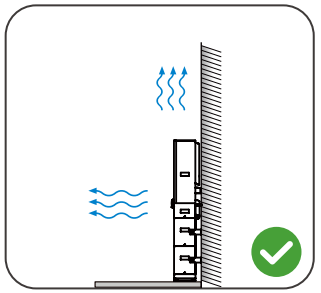

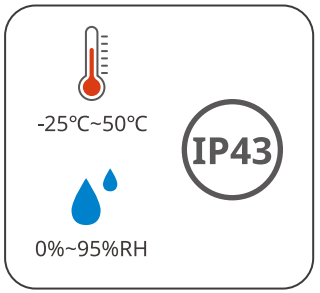

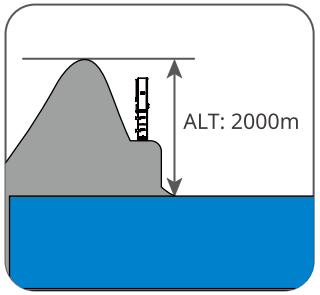

Mounting Support Requirements

- Install the System on a surface that is solid enough to bear its weight.
- Put the battery system near the wall and install the locking brackets to prevent the battery from falling down.

Installation Angle Requirements

- Install the equipment vertically, no tilt or upside down.

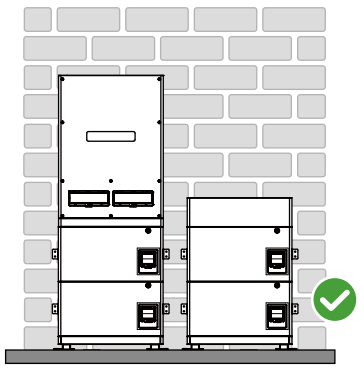

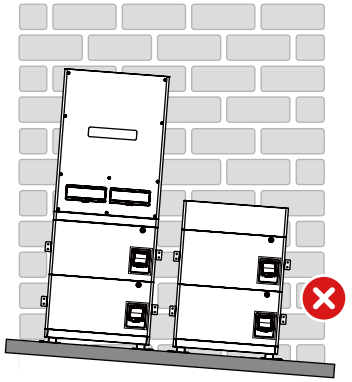

5.2 Installing the Battery and the Cabinet

Installing the battery and base

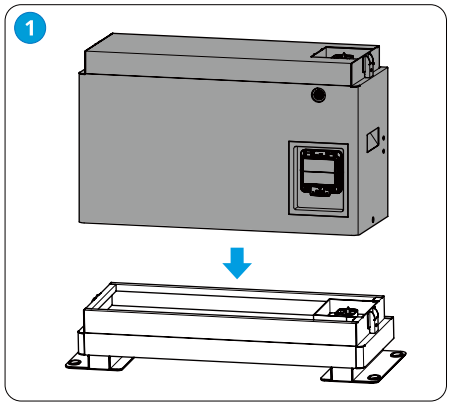

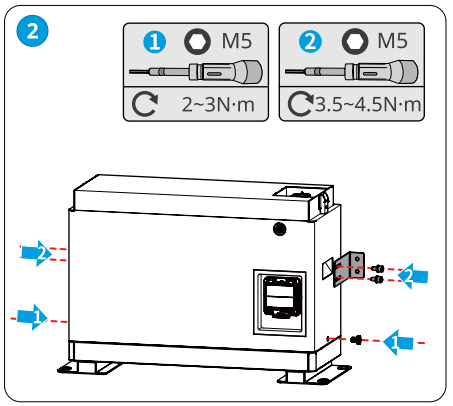

Installing the upper cabinet and the battery

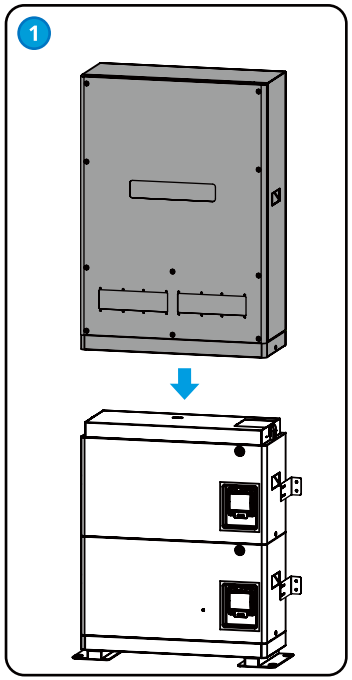

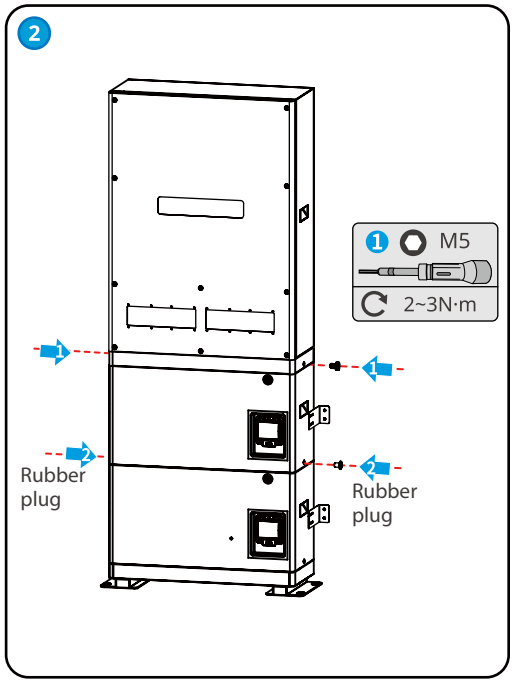

Install the expansion battery adapter box and battery

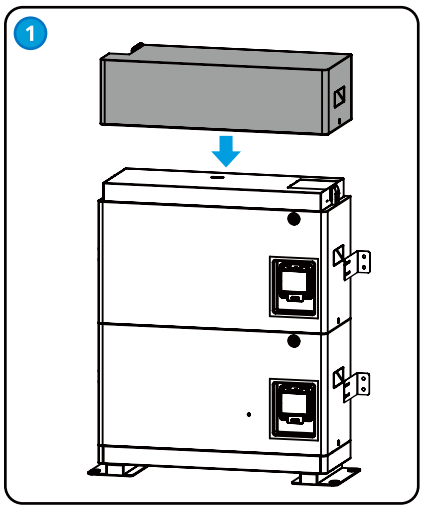

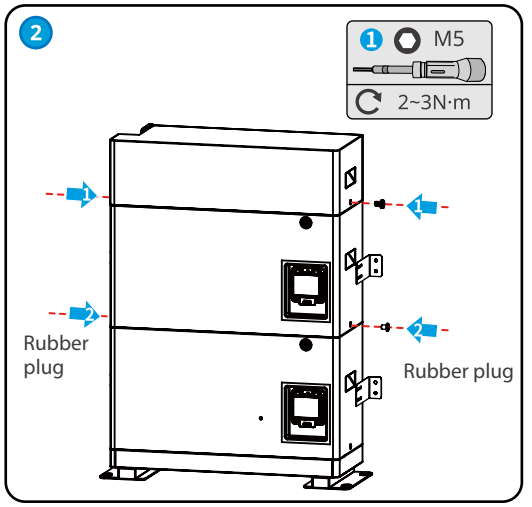

6 Electrical Connection

Expansion Battery Wiring

NOTICE

- Only applicable to scenarios where 3-4 battery modules are used in parallel.
- Please use the battery PE cable, power cable, and communication cable in the attachment package for wiring.

Connecting the PE Cable.

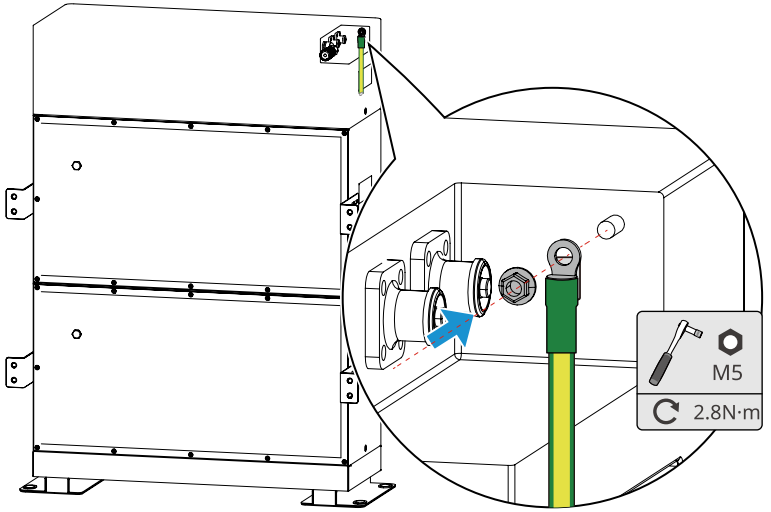

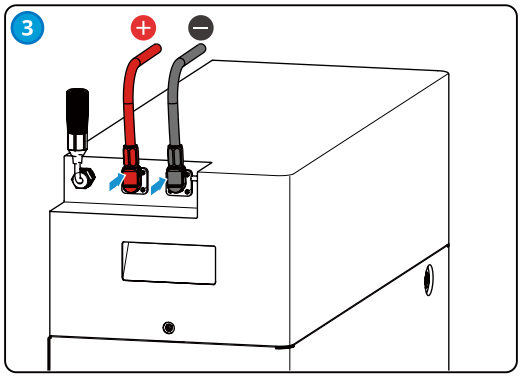

Connecting the Expansion Battery Communication Cable

WARNING

This chapter only introduces the connection method and port definition of the communication cable. Please refer to the system networking for the connection requirements of the battery system communication cable.

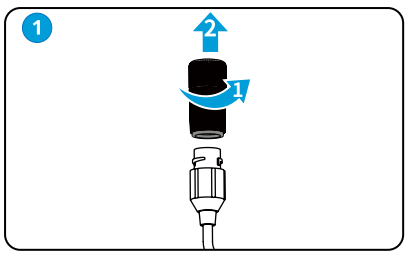

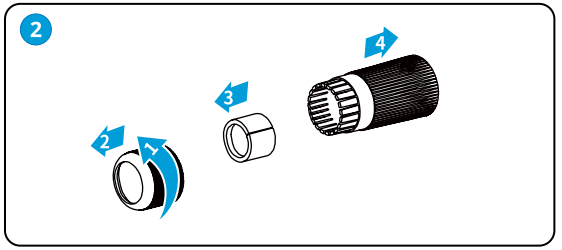

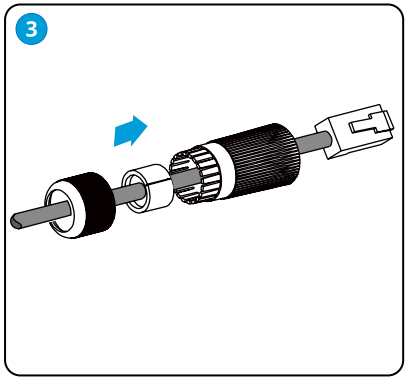

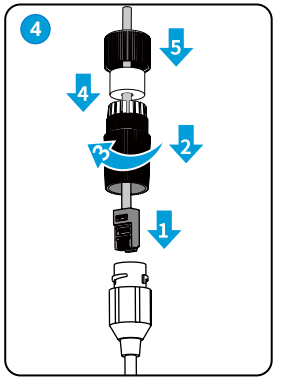

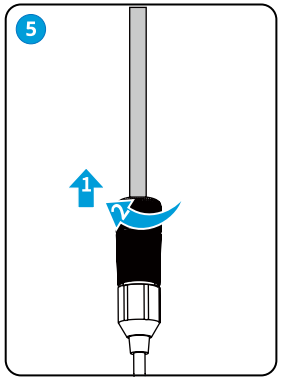

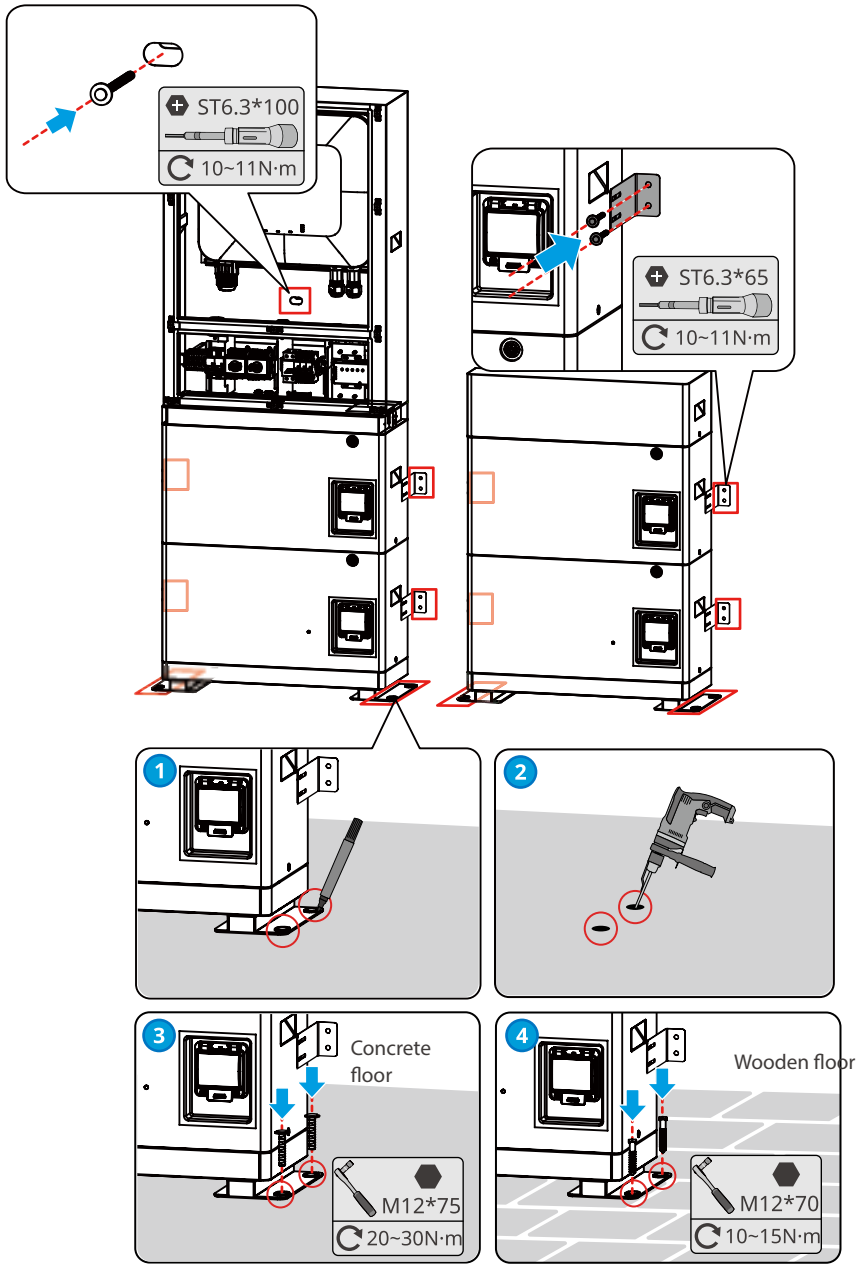

7 Power On and Off

7.1 Check Before Power ON

Check the following items before power on to prevent system damage.

No.	Check Item
1	The System is firmly installed at a clean place that is well-ventilated and easy-to operate.
2	The PE, DC input, AC output, and communication cables are connected correctly and securely.
3	Cable ties are intact, routed properly and evenly.
4	Unused ports and terminals are sealed.
6	The voltage and frequency at the System's connection point meet the grid connection requirements.

7.2 System Power On

1. Turn on the battery control switch on the cabinet.
2. Turn on all batteries' air switches.
3. Press any battery button switch.
4. Turn on the AC output control switch and PV input control switch on the cabinet in sequence.
5. Turn on the DC switch of the inverter (only applicable to the first system power on).

7.3 Battery Indicator Status

NOTICE
1. When the battery's green light flashes during use, the warning category can be viewed through SolarGo App. 2. When the battery's red light flashes, the fault category can be viewed through SolarGo App.

No.	Check Item
Steady green light	Normal
Green light flashes	Standby
Steady red light	Fault
Red light flashes	Alarming

7.4 System Power Off

1. Turn off the AC output control switch, PV input control switch, and battery control switch on the cabinet in sequence.
2. Battery power off
   - Method 1: Press the button switch on the battery for more than 5 seconds, and confirm that the button indicator light is off (when multiple batteries are connected in parallel, only one battery needs to be operated).
   - Method 2: Turn off all batteries' air switches.

7.5 Routine Maintenance

⚠ WARNING

- Power off the System before operations and maintenance. Otherwise, the equipment may be damaged or electric shocks may occur. (Please refer to 7.4 System Power Off).
- Contact the after-sales service for help if you find any problems that may influence the battery or the hybrid inverter. Disassemble without permission is strictly forbidden.
- Contact after-sale service for help if the copper conductor is exposed. Do not touch or disassemble privately because the high voltage danger exists.
- In case of other emergencies, contact the after-sales service as soon as possible. Operate following the instructions or wait for the after-sales service personnel.

Maintaining Item	Maintaining Period
Check whether the locking bracket is secured, tighten it if not.	Once every 6 months
Check whether the outer enclosure is broken. Repair the painting or contact the after-sales service if there is any broken.	Once every 6 months
Check whether the cables are exposed. Replace the exposed cable or contact the after-sales service for help.	Once every 6 months
Check whether there is any dust around the battery module. Clean the dust if there is any to avoid affecting heat dissipation.	Once every 6 months
Check whether there is any liquid or pest near the battery to avoid intrusion in a long term.	Once every 6 months

7.6 Setting Parameters via SolarGo App

SolarGo app is a smart phone application used to communicate with the inverter via bluetooth, WiFi, 4G or GPRS modules. Commonly used functions are as follows:

1. Check the operating data, software version, alarms, etc.
2. Set grid parameters, communication parameters, etc.
3. Equipment maintenance.

For more details, refer to SolarGo User Manual. Scan the QR code or visit https://en.goodwe.com/Ftp/EN/Downloads/User%20Manual/GW_SolarGo_User%20Manual-EN.pdf to get the user manual. Or scan the following QR code to obtain it.

SolarGo App

SolarGo App
User Manual

8 Technical Parameters

Battery Input Data		
Battery Parameters	SV-R30-BATTERY-S5.4	SV-R30-BATTERY-S10.8
Rated Energy (kWh)	5.37	10.74
Usable Energy (kWh)*3	4.83	9.66
Cell Type	LFP(LiFePO4)	
Rated Voltage (V)	51.2	
Operating Voltage Range (V)	47.5~57.6	
Nominal Dis-/Charge Current (A)*4	50A	50A
Max. Dis-/Charge Current (A)	100A(15min)	100A
Max. Discharge Power(kW)*	5.76	5.76
Communication	CAN&RS485	
Battery Weight (kg)	68kg	121kg
Battery Dimensions (W*D*H) (mm)	710*260*600	710*260*940
Operating Temperature(℃)	Charge: 0~+50; Discharge: -10~+50	
Relative Humidity	0~95%	
Max. Operating Altitude (m)	2000	
Protection Degree	IP55(Post-stack Assembly)	
Standard and Certification	Safety, EMC, UN38.3	

1 Operating Temperature Range ( ): When the temperature is lower than 0 ° C, the battery will stop charging. When the temperature is lower than -10 ° C, the battery will stop discharging. The PV and AC are running properly.

*2 The max power is the actual power of PV.

3 Usable Energy (kWh) : Test conditions, 90% DOD, 0.5C charge & discharge at +25±3 °C for battery system at beginning life. System Usable Energy may vary with different Inverter.

4 Max. Continuous Discharge Current/Power*: Max. Continuous Charge/Discharge and power derating will occur related to Temperature and SOC.