Panasonic

Operating Instructions
使用說明書
(Household use) Rechargeable Shaver
（家用）充電鬚刨

Model No. ES-CM3A
型號

Thank you for purchasing this Panasonic product.
感謝您購買本 Panasonic 產品。
Before operating this unit, please read these instructions completely and save them for future use.
操作本產品之前，請仔細閱讀本說明書。請妥善保存本說明書以供未來使用。

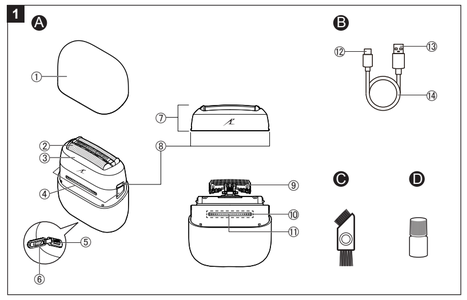

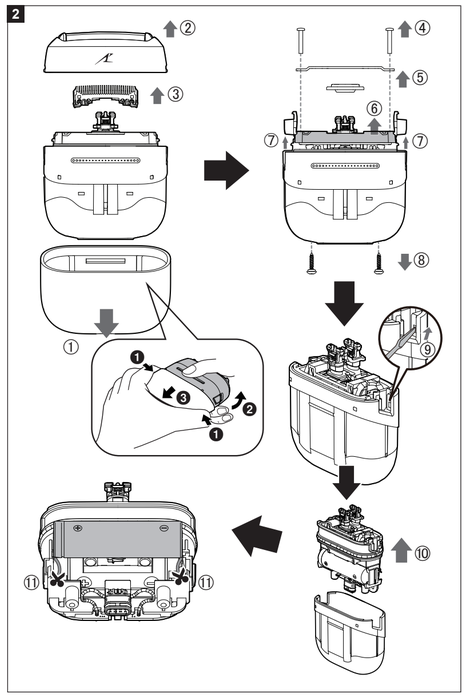

Panasonic Corporation
https://www.panasonic.com

© Panasonic Corporation 2023

Printed in China
Ⓔ EN, HK
ES9700CM3A1451 S1023-0

Safety precautions

To reduce the risk of electric shock, injury, fire, loss of life, and damage to property, always observe the following safety precautions.

Explanation of symbols

The following symbols are used to classify and describe the level of hazard, injury, and property damage caused when the notation is disregarded and improper use is performed.

⚠ DANGER	Indicates potential hazard that will result in serious injury or death.
⚠ WARNING	Indicates potential hazard that could result in serious injury or death.
⚠ CAUTION	Indicates potential hazard that could result in minor injury or property damage.

The illustrations in the manual may differ from the actual item.

⚠ WARNING

►This product
- **This product has a built-in rechargeable battery. Do not throw into flame or heat. Do not charge, use, or leave in high temperature environments.**
  - Doing so may cause overheating, ignition, or explosion.
- **Do not modify or repair.**
  - Doing so may cause fire, electric shock, or injury. Contact an authorized service center for repair (battery change etc.).
- **Never disassemble except when disposing of the product.**
  - Doing so may cause fire, electric shock, or injury.
- **Unplug the USB cable from the main body when cleaning.**
  - Failure to do so may cause electric shock or injury.

►In case of an abnormality or malfunction
- **Immediately stop using this product and disconnect USB power adaptor (sold separately) if there is an abnormality or malfunction.**
  - Failure to do so may cause fire, electric shock, or injury.
  <Abnormality or malfunction cases>
  - **The main body, USB power adaptor or USB cable is deformed or abnormally hot.**
  - **The main body, USB power adaptor or USB cable smells of burning.**
  - **There is abnormal sound during use or charging of the main body.**

  →Immediately request inspection or repair at an authorized service center.

►Power supply
- **Do not use this product beyond the rated values of the power supply.**
  - Doing so may cause fire.
- **Fully insert the power plug of the USB power adaptor (sold separately).**
  - Failure to do so may cause fire or electric shock.

►About the USB power adaptor (sold separately) and USB cable
- **Do not connect or disconnect the USB power adaptor or USB cable to or from the power supply with a wet hand.**
  - Doing so may cause electric shock or injury.
- **Do not charge this product when the USB power adaptor or USB cable is damaged or when the fitting into the household outlet is loose.**
- **Do not immerse the USB power adaptor or USB cable in water or wash it with water.**
- **Do not damage, modify, forcefully bend, pull, twist, or place anything heavy on the USB power adaptor or USB cable.**
  - Doing so may cause electric shock or fire due to a short circuit.
- **Do not charge this product using any USB cable other than the supplied USB cable. Also, do not use any other product with the supplied USB cable.**
  - Failure to do so may cause fire, electric shock, or injury.
  →The USB cable provides the overheat protection function. If charging is abnormal or the Type-C plug heats up, disconnect the power supply, check the socket [Ⓐ⑤], and remove any water or foreign objects from the socket.
- **Always plug the USB cable to a power supply with a rated voltage of 5.0 V and a rated output current of 1.0 A which meets requirements of the Safety Extra Low Voltage (SELV) system.**
  - Doing so may cause burn or fire due to a short circuit.
  It is necessary to separately purchase a power adapter if required to power this product. The Panasonic power adapter ES-RU1-02 is recommended.
- **Clean regularly to prevent dust from accumulating.**
  - Failure to do so may cause fire due to insulation failure caused by humidity.
  →Disconnect the USB power adaptor and wipe with a dry cloth.

►Preventing accidents
- **This product is not intended for use by persons (including children) with reduced physical, sensory or mental capabilities, or lack of experience and knowledge, unless they have been given supervision or instruction concerning use of the product by a person responsible for their safety. Children should be supervised to ensure that they do not play with the product.**
  - Failure to do so may cause an accident or injury.
- **Do not charge when the socket is wet.**
  - Failure to do so may cause fire or electric shock.
- **Do not place within reach of children or infants. Do not let them use it.**
  - Doing so may cause an accident or injury due to accidental ingestion of the inner blade, cleaning brush, etc.
- **If the oil is consumed accidentally, do not induce vomiting, drink a large amount of water, and consult a physician.**
- **If the oil comes into contact with eyes, immediately wash thoroughly with running water, and consult a physician.**
  - Failure to follow these instructions may result in physical problems.

⚠ CAUTION

►To protect the skin
- **Check the system outer foil for any damage or deformation before use.**
  - Failure to do so may cause injury to skin.
- **Do not forcefully press the system outer foil on the skin or lips. When there are small bumps on the face or the skin is injured, avoid direct contact with the system outer foil.**
- **Do not touch the blade section (metallic section) of the inner blade directly with your hands.**
  - Doing so may cause injury to skin or hand.
- **Do not forcefully press the system outer foil. Do not touch the system outer foil with fingers or nails when in use.**
- **Do not use this product for any purpose other than shaving. (For example, hair shaving)**
  - Failure to do so may cause injury to skin or reduce the life of the system outer foil.

►Note the following precautions
- **Do not allow needles or any other foreign objects to adhere to the power plug of the USB power adaptor (sold separately) or the plugs of the USB cable.**
  - Doing so may cause electric shock or fire due to a short circuit.
- **Do not share with your family or others.**
  - Doing so may result in infection or inflammation.
- **Disconnect the USB power adaptor (sold separately) from the household outlet when not charging.**
  - Failure to do so may cause electric shock or fire due to electrical leakage resulting from insulation deterioration.

Handling of the removed battery when disposing

⚠ DANGER

- **The rechargeable battery is exclusively for use with this product. Do not use the battery with other products.**
- **Do not charge the battery after it has been removed from this product.**
- **Do not throw into fire or apply heat.**
- **Do not hit, disassemble, modify, or puncture with a nail.**
- **Do not let the positive and negative terminals of the battery get in contact with each other through metallic objects.**
- **Do not carry or store the battery together with metallic jewellery such as necklaces and hairpins.**
- **Do not use or leave the battery where it will be exposed to high temperature environments, such as under direct sunlight or near other sources of heat.**
- **Never peel off the tube.**
  - Doing so may cause overheating, ignition, or explosion.

⚠ WARNING

- **After removing the rechargeable battery, do not keep it within reach of children and infants.**
  - The battery will harm the body if accidentally swallowed.
  If this happens, consult a physician immediately.
- **If the battery fluid leaks out and comes in contact with the eyes, do not rub the eyes, and thoroughly rinse with clean water, such as tap water.**
  - Failure to do so may cause eye injury.
  Consult a physician immediately.

⚠ CAUTION

- **If the battery fluid leaks out and comes in contact with the skin or clothes, rinse off with clean water, such as tap water.**
  - Failure to do so may cause inflammation.

Important information

► Notes
- This product is dry/wet dual purpose. The sign on the right indicates that this product can be used in the bath or shower.

► To avoid product malfunction, deformation and aging, observe the following precautions:
- Do not drop this product or subject it to shock.
- Do not hit the system outer foil on any hard objects.
- After use, store this product in a dry place.
- Do not store this product in a place with direct sunlight inside the carriage.
- Do not heat or dry this product with a hair dryer.
- When carrying or storing this product, always attach the protective cap.

► Notes
- Charge this product correctly according to these Operating Instructions. (See “Charging”.)
- This product contains a battery that is only replaceable by skilled persons. Please contact an authorized service center for the details of repair.

Parts identification (Fig. 1)

Ⓐ Main body
① Protective cap
② System outer foil
③ Foil frame
④ Foil frame release buttons
⑤ Socket (Type-C)
⑥ Socket cover
⑦ Outer foil section
⑧ System outer foil release buttons
⑨ Inner blades
⑩ Power Switch
⑪ Charge status indicator (red)

Ⓑ USB cable
⑫ Type-C plug (Main body end)
⑬ Type-A plug (Power adaptor end)
⑭ Cord

Accessories
Ⓒ Cleaning brush
Ⓓ Oil

Charging

- Before charging, make sure that this product is powered off.
- Do not charge when the socket is wet. Wipe the socket when it is wet before charging.
- Open the protective cap to check that the charge status indicator lights on, and then install the protective cap to avoid damaging the system outer foil.

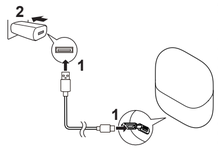

1. Insert the USB cable into the main body and the USB power adaptor.
2. Connect the USB power adaptor to a household outlet.
3. After charging, remove the USB cable and attach the socket cover.

- Be sure to close the socket cover when using or washing.

► Display of the charge status indicator during charging

Charging in progress	Lights on
Charging complete	Lights off
Charging abnormal	Blink twice every second

► When the battery capacity is low
- When this product is in use, the charge status indicator blinks once a second.
- When this product is powered off, the main body generates a prompt tone.

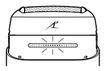

► How to confirm that charging is completed
- If the Type-C plug is removed and inserted back to charge this product again right after charging is completed, the charge status indicator turns on and then off in about 5 seconds.

► Notes
- You cannot operate this product while charging.
- This product may be charged with adaptors other than the specified one, but Panasonic's specified adaptor with splash-resistant design should be used to ensure safety. The Panasonic's specified adaptor is not completely waterproof, so do not immerse the adaptor in water.
- This product uses a Li-ion battery. Therefore, the service life of the battery will not be affected even if it is charged after each use.
- Charging is completed after approx. 1 hour. The charging time may be shortened, depending on the remaining battery level.
- When this product is used for the first time or when it has not been used for more than 6 months, the charging time may differ and the charge status indicator may not light on immediately. However, it will light on as the charging proceeds.
- If this product has not been used for a long time, the battery performance may be degraded. Therefore, if this product has not been used for more than half a year, please fully charge the battery once every half a year.
- If an ineligible power supply is used for charging or such problems as poor contact of the USB cable occur, the charging time may become longer and this product may even be damaged.
- This product can be used for approximately 60 minutes after it is fully charged. (Based on dry-shave usages in an ambient temperature range of 20 °C – 30 °C.) The available days depend on the usage conditions: beard thickness, pressure applied to the skin, and use of wet shaving.
- If there is noise from the radio or other sources while this product is used or charged, move this product to a different location or charge it with another household outlet.

How to use

To power on/off:
Touch point A with a finger until the white indicator lights on, slide your finger from point A to point B, and stop at point B for a moment.
You can also slide your finger from point B to point A.

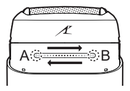

Tips for Use:
1. Finish your sliding within 1 second.
2. During sliding, do not allow other fingers to touch the area of the power switch.
3. Wearing gloves or wet hands may affect the touch sensing effect.

This product comes with a “shaving sensor”, which automatically adjusts the shaving force depending on the beard thickness. This product increases the shaving force in areas with dense beard and reduces the force in areas with sparse beard to reduce the burden on the skin.

■ The following can be used during wet shaving:

Shaving agent	Shaving foam	√
	Shaving gel	√
	Shaving cream	×
Facial cleanser	Cleansing foam (without facial scrub)	√
	Cleansing foam (including facial scrub)	×
	Cleansing soap	√
Bathing soap	Liquid	√
	Foam	√

■ How to improve the shaving effect
- Apply the whole system outer foil perpendicularly against the skin and shave by slowly sliding this product over the face against the grain of the beard.

- To prevent damaging the system outer foil, do not shave with only a part of the system outer foil.

- The beard under the chin and around the throat can be shaved better by stretching the skin so the beard will stand.

► Notes
- It is recommended to clean this product after each use.
- After wet shaving, clean the main body with water and then apply oil on the system outer foil.

Cleaning

- Power off this product and unplug the USB cable from the main body.

1 **Apply a small amount of hand soap and water on the system outer foil. Power on this product, leave it run for 10 to 20 seconds, and then power it off.**

2 **Press the foil frame release buttons to remove the outer foil section. (See “Replacing the system outer foil and the inner blades”.) Clean this product with running water.**
- After rinsing with water, wipe off any excess water with a dry cloth.

3 **Store this product after drying it.**
❶ Remove the outer foil section and the shell, thoroughly dry the main body.
- Leave this product dry in the shade, out of direct sunlight.

❷ After this product is dried completely, install the outer foil section and the shell onto the main body.
- Refer to “Replacing the system outer foil and the inner blades” and the following schematic diagram for the method of installation and removal.

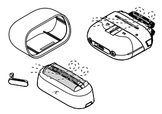

- Perform the following operations after installing the outer foil section onto the main body:

To disassemble the shell (ⓐ):
① Hold the enclosure and forcefully squeeze both sides of the enclosure.
② Hold the gray part in the figure with the other hand and gently pull it upwards.
③ Pull the enclosure down.

To install the shell (ⓐ):
① Attach the socket cover onto the hole of the shell (ⓐ).
② Attach the shell (ⓐ) onto the main body until a “click” sound is heard while keeping the trademark on the shell (ⓐ) on the same side as the power switch.

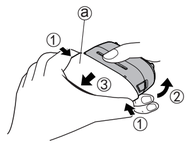

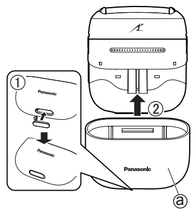

4 **Lubricate this product.**
- To maintain comfortable shaving on a long-term basis, it is recommended to use the included oil.

❶ Apply a drop of oil onto the system outer foil.
❷ Power on this product and leave it run for approximately 5 seconds.
❸ Power off this product and wipe off any excess oil from the system outer foil with a soft cloth.

► Notes
- Be careful not to hit this product on the sink or any other objects while draining the water. Failure to do so may cause malfunction.
- Do not use any other cleaning agents than hand soap. Doing so may cause malfunction.
- Do not clean this product with thinner, gasoline, alcohol, or other chemicals. Doing so may cause cracking or discoloration of this product. The enclosure can be cleaned with a soft cloth moistened with tap water or soap solution.

Cleaning with the brush

► Clean the system outer foil and the main body using the long brush.

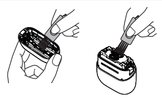

► Clean the inner blades using the short brush by moving it in the direction shown in the right figure (A).
- Do not move the short brush in the (B) direction. Doing so may damage the inner blades and thus affect their sharpness.
- Do not use the short brush to clean the system outer foil.

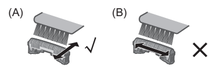

Replacing the system outer foil and the inner blades

- It is recommended to replace the system outer foil once a year and the inner blades once every two years.

► Replacement parts
Replacement parts are available at your dealer or Service Center.

Replacement parts for ES-CM3A	System outer foil	WES9087
	Inner blades	WES9068

► Outer foil section
How to remove
Press the foil frame release buttons to lift and remove the outer foil section.
How to install
Turn the foil frame mark (⊿) to the front, and securely attach the outer foil section onto the main body until a “click” sound is heard.

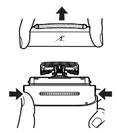

► System outer foil
How to remove
Press the system outer foil release buttons and pull down the system outer foil.
How to install
Align the foil frame mark (⊿) with the system outer foil mark (△), and securely attach them together until a “click” sound is heard.
- Do not press the system outer foil release buttons with excessive force.
  Doing so may bend the system outer foil, preventing complete attachment to the foil frame.
- The system outer foil cannot be reversely installed.
- When installing the system outer foil into the main body, ensure that the system outer foil is inserted into the foil frame.

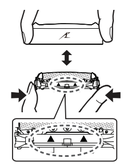

► Inner blades
How to remove
Remove one inner blade at a time.
- Do not touch the edges (metallic section) of the inner blades in case your hands are injured.

How to install
Insert one inner blade at a time until they are fixed in position.

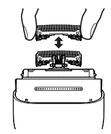

► Note
Do not throw away the foil frame.

Battery life

Approximately 3 years. If the operating time is significantly shorter even after a full charge, the battery has reached the end of its life. (The battery life may change due to usage and storage conditions.)

Specifications

Power supply	**5.0 V ⎓ 1.0 A** In compliance with the Safety Extra Low Voltage (SELV) system
Charging time	Approx. 1 hour

This product is intended for household use only.

Troubleshooting

Problem		Action
The shaving sensor does not respond. (The driving sound does not change.)	►	Depending on the beard thickness or the amount of beard trimmings in the outer foil section, the shaving sensor may not react. This is not a sign of malfunction.
	►	Depending on the amount of foam or the type of shaving agent, the shaving sensor may not react. This is not a sign of malfunction.
	►	When the remaining battery level is too low, charge this product.
	►	Apply oil. (See “Cleaning”)
The shaving sensor responds even though this product is not in contact with the skin.	►	Clean the beard trimmings from the system outer foil and inner blades. (See “Cleaning”)
	►	Replace the system outer foil or inner blades once they reach their service life.
This product cannot be charged.	►	The recommended ambient temperature for charging is 10 °C to 35 °C.
	►	Check whether the USB cable is securely connected to the power supply. If the above measures are inapplicable, remove the USB cable and insert it again.
	►	If the Type-C plug heats up, disconnect the power supply, check the socket [Ⓐ⑤], and remove any water or foreign objects from the socket.
The power switch cannot be operated.	►	The foam of shaving agent or hand soap may be attached in the area of the power switch. Rinse the foam thoroughly before operating the switch.
Operating time is short after charging.	►	Apply oil.
	►	The battery has reached the end of its life. (approx. 3 years)
	►	This can be improved by cleaning this product after each shaving.
This product does not operate even after charging.	►	The recommended ambient temperature for using the product is not lower than 5 °C.
	►	The battery has reached the end of its life. (approx. 3 years)
	►	When the power supply is connected, this product does not operate.
The driving sound changes while shaving.	►	The shaving sensor is operating. The driving sound changes depending on the beard thickness.
A loud sound is heard.	►	Apply oil. When there is no oil on the blades, the blades will not move smoothly and require more power.
	►	When the magnetic levitation motor is driven, a high-pitched running sound is heard. This is not a sign of malfunction.
	►	Check that the blades are properly attached.
	►	Clean the system outer foil with the cleaning brush.
An odor is smelt from the blades.	►	This can be improved by cleaning this product after each shaving.
Shavings fly around.	►	This can be improved by cleaning this product after each shaving. Clean the inner blades with the cleaning brush when shavings are adhering to the inner blades.
The system outer foil is overheated.	►	Apply oil.
	►	Replace the system outer foil if it is damaged or deformed. (See “Replacing the system outer foil and the inner blades”)
The shaving performance deteriorates.	►	This can be improved by cleaning this product after each shaving.
	►	Replace the system outer foil or inner blades once they reach their service life.
	►	Apply oil.

If the problems still cannot be solved, contact the store where you purchased this product or a service center authorized by Panasonic for repair.

Removing and disposing of the built-in rechargeable battery (Fig. 2)

This product has a built-in rechargeable battery. Be sure to remove the battery before disposing of this product.
- The battery is to be disposed safely.
- This figure must only be used when disposing of this product and must not be used to repair it.
- If you dismantle this product yourself, it will no longer be waterproof, which may cause it to malfunction.
- We recommend seeking the advice of a dealer or Panasonic’s authorized service center before deciding to dispose of this product, so as to extend the service life of this product as much as possible.
- If you decide to dispose of this product but do not want to disassemble this product by yourself to remove the battery, we recommend taking this product to Panasonic’s authorized service center which will remove and recycle the battery.

► How to remove the built-in rechargeable battery
- Power off this product before removing the battery. Turn on the power and keep the power on until the battery is completely discharged.
- Follow Steps ① to ⑪ as illustrated to disassemble this product and remove the battery with a screwdriver.
- During disassembly, take care not to short circuit the positive and negative terminals of the removed battery and insulate the terminals by applying tape to them.
- If you cannot remove the battery, please contact an authorized service center.

For environmental protection and recycling of materials
This product contains a Li-ion battery.
Please make sure that the battery is disposed of at an officially assigned location, if there is one in your country.

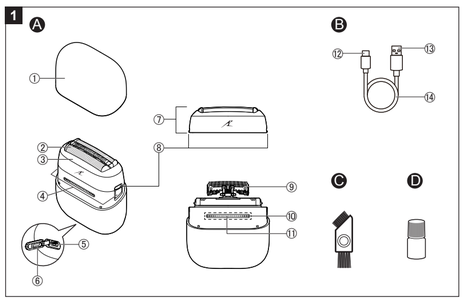

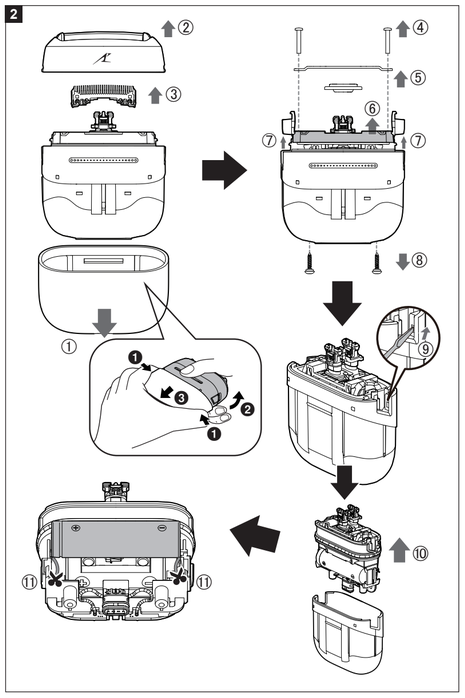

安全須知

為減低觸電、受傷，火災、死亡及財物損失的風險，請務必遵照以下安全預防措施。

符號說明

以下符號用於為危險、傷害及財物損失的級別分類和作出解釋。若不理會此等符號，不當使用本產品就可能會導致所述的危險、人身傷害及財物損失。

⚠危險	表示潛在的危險會導致嚴重受傷或致命。
⚠警告	表示潛在的危險可能會導致嚴重受傷或致命。
⚠注意	表示可能會導致輕微受傷或財產損失。

本說明書中使用的產品圖片，可能會與實際產品有所不同。

⚠警告

►本產品

- **本產品有內置可充電式電池。切勿棄進火源或熱源中。切勿將電池留在高溫的環境中，或在這些環境中充電和使用。**
  - 否則可能會導致內置充電電池過熱、燃燒或爆炸。
- **切勿改裝或維修本產品。**
  - 否則可能會導致火警、觸電或受傷。請聯絡客戶諮詢服務中心（更換電池等）。
- **切勿拆卸本產品，棄置時除外。**
  - 否則可能會導致火警、觸電或受傷。
- **清洗前，請先將 USB 電源線從機身拔除。**
  - 否則可能會觸電或受傷。

►如出現異常或故障

- **若本產品出現異常或故障情況，請立即停止使用本產品並拔除 USB 電源供應器（須另行購買）。**
  - 否則可能會導致火警、觸電或受傷。

  <異常或故障情況>
  - **機身、USB 電源供應器或 USB 電源線變形或異常灼熱。**
  - **機身、USB 電源供應器或 USB 電源線發出燒焦氣味。**
  - **機身在使用或充電時發出異常聲響。**

  →請立即聯絡客戶諮詢服務中心。

►電源

- **切勿以超出家用電源插座或配線額定值的方式使用本產品。**
  - 否則可能會導致火警。
- **必須將 USB 電源供應器（須另行購買）的電源插頭完全插入。**
  - 否則可能會導致火警或觸電。

►USB 電源供應器（須另行購買）和 USB 電源線

- **請勿在手濕時將 USB 電源供應器或 USB 電源線插入家用插座，或者從家用插座中拔出。**
  - 否則可能會導致觸電或受傷。
- **如果 USB 電源供應器或 USB 電源線損毀，或者在插入家用插座時鬆脫，請勿使用 USB 電源供應器或 USB 電源線。**
- **切勿將 USB 電源供應器或 USB 電源線浸在水中或用水洗滌。**
- **請勿損壞、改裝、強行彎曲、拉扯、扭曲、捆紮或夾緊 USB 電源供應器或 USB 電源線。此外，切勿將重物放在 USB 電源供應器或 USB 電源線上。**
  - 否則可能會因短路而導致觸電或火警。
- **除了附上的 USB 電源線外，在任何情況下請勿使用任何其他 USB 電源線，此外亦請勿使用隨本產品附上的 USB 電源線為其他產品充電。**
  - 否則可能會導致火警、觸電或受傷。

  →USB 電源線配備過熱保護功能。假如充電情況異常，或者 Type-C 插頭發熱，請拔出電源供應器、檢查電源插孔 (Ⓐ⑤)，並清除電源插孔上的所有水分或異物。
- **必須將 USB 電源線插入額定電壓 5.0 V 和額定輸出電流 1.0 A 且符合安全特低電壓（Safety Extra Low Voltage，SELV）系統的要求的電源供應器。**
  - 否則可能會因短路而導致灼傷或火警。

  如有需要，可另行購買電源供應器，藉以為本產品供電。建議使用 Panasonic ES-RU1-02 電源供應器。
- **應定期清潔，以避免積聚灰塵。**
  - 否則濕氣可能會令絕緣失效而導致起火。

  →請斷開 USB 電源供應器的連接，並用乾布擦拭。

►防止意外

- **本產品不宜供肢體、感官或精神上有障礙、或缺乏經驗及知識等人士（包括兒童）使用，必須有監護人從旁監督，並指導使用本產品，且能承擔使用者安全的責任。**

  並應妥善照顧兒童，確保他們不會把玩本產品。
  - 否則可能會導致意外或受傷。
- **切勿在電源插孔沾濕的情況之下充電。**
  - 否則可能會導致火警或觸電。
- **切勿將本產品存放於兒童或幼童可觸及的地方。切勿讓兒童或幼童使用本產品。**
  - 否則可能會因意外誤食內層刀片、清潔刷等，而導致意外或受傷。
- **假如不慎吞服了潤滑油，切勿迫使自己嘔吐，應飲用大量清水並前往就醫。**
- **假如雙眼接觸到潤滑油，應立即用清水徹底沖洗雙眼並前往就醫。**
  - 否則可能導致身體健康問題。

⚠注意

►保護肌膚

- **使用之前，請檢查外層網面，觀察有否損壞或變形。**
  - 否則可能導致皮膚受傷。
- **切勿以外層網面用力按壓皮膚或嘴唇。面部如有少量隆起部位或有受損皮膚，應避免直接接觸外層網面。**
- **切勿用手直接接觸內層刀片的刀片部分（金屬部分）。**
  - 否則可導致皮膚或手部受傷。
- **切勿用力按壓外層網面。使用本產品期間，切勿用手指或指甲接觸外層網面。**
- **切勿將本產品用於剃鬚之外的任何用途。（例如修剪頭髮）**
  - 否則可導致皮膚受傷，或縮短外層網面的壽命。

►請注意以下安全須知

- **切勿讓針頭或任何其他異物黏附在 USB 電源供應器（須另行購買）的電源插頭上，或黏附在 USB 電源線的插頭上。**
  - 否則可能會因短路而導致觸電或火警。
- **切勿與家人或他人共用本產品。**
  - 否則可導致感染或發炎。
- **不充電時，請從家用插座拔除 USB 電源供應器（須另行購買）。**
  - 否則可因絕緣劣化造成漏電，導致觸電或火警。

如何處置從廢棄產品中拆下的電池

⚠危險

- **本充電電池僅能用於搭配此產品使用。請勿將本電池搭配其他產品使用。**
- **將電池從產品拆除後，請勿進行充電。**
- **請勿丟入火中或加熱。**
- **請勿撞擊、拆解、改裝或以指甲穿刺。**
- **請勿讓電池的正極和負極端子透過金屬物質相互接觸。**
- **請勿將電池與金屬飾品，如項鍊及髮夾等一起攜帶或存放。**
- **切勿在高溫的位置使用或放置電池，例如在陽光直射或靠近其他熱源的地方。**
- **請勿刺下電池直流管。**
  - 否則可導致過熱、燃燒或爆炸。

⚠警告

- **拆除充電電池後，切勿放在孩童或嬰兒可取得的地方。**
  - 若意外吞下電池，會傷害身體。

  若發生此狀況，請立即就醫。
- **若電池液體外漏且接觸到眼睛，請勿揉搓眼睛，並使用清水（如自來水）徹底沖洗。**
  - 否則可能會導致眼睛受傷。

  請立即就醫。

⚠注意

- **若電池液體外漏且接觸到皮膚或衣物，請使用清水（如自來水）沖洗。**
  - 否則可能導致發炎。

使用須知

►註

- 本產品可乾濕兩用。右方符號表示，本產品可在浸浴或花灑浴時使用。

► 為避免本產品故障、變形或老化，請遵從以下安全須知：

- 切勿將本產品摔落或使其受到撞擊。
- 切勿以任何硬物撞擊外層網面。
- 使用之後，請將本產品存放於乾爽之處。
- 請勿將本產品置於高溫或太陽直射處。
- 切勿烘乾或用風筒吹乾本產品。
- 攜帶或存放本產品時，必須先裝上保護蓋。

►註

- 請根據本說明書將本產品正確充電。（見「充電」。）
- 本產品含有的電池只能交由專業人員更換。如需詳細的維修資訊，請洽詢客戶諮詢服務中心。

部件名稱（圖 1）

Ⓐ 機身

① 保護蓋
② 外層網面
③ 網面支架
④ 網面支架鬆開按鈕
⑤ 電源插孔（Type-C）
⑥ 電源插孔保護蓋
⑦ 外層網面部分
⑧ 外層網面鬆開按鈕
⑨ 內層刀片
⑩ 電源開關
⑪ 充電狀態指示燈（紅色）

Ⓑ USB 電源線

⑫ Type-C 插頭（插入機身）
⑬ Type-A 插頭（插入電源供應器）
⑭ 電源線

配件

Ⓒ 清潔刷
Ⓓ 潤滑油

充電

- 充電之前，請確保本產品已關上電源。
- 切勿在電源插孔沾濕的情況之下充電。如果在充電之前電源插孔處於沾濕狀態，請先抹乾電源插孔。
- 打開保護蓋，以檢查確認充電狀態指示燈已亮起，然後再裝上保護蓋，以避免外層網面損壞。

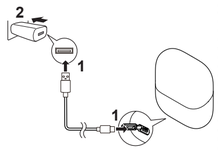

1. 將 USB 電源線插入機身及 USB 電源供應器。
2. 將 USB 電源供應器插入家用電源插座。
3. 充電之後，請拔除 USB 電源線並裝上電源插孔保護蓋。

- 在使用或清洗時，請確保已關上電源插孔保護蓋。

►充電時的指示燈顯示方式

充電中	亮起
充電完成	熄滅
充電異常	每秒閃爍兩次

►電池電量偏低

- 產品使用期間，充電狀態指示燈會每秒閃爍一次。
- 產品關閉電源之後，機身會發出提示聲響。

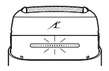

► 檢查是否已充電完畢

- 充電完成之後，如果拔出再插入 Type-C 插頭再次為產品充電，充電狀態指示燈便會亮起，並於 5 秒之後熄滅。

► 註

- 本產品無法在充電期間使用。
- 本產品可以使用 Panasonic 電源供應器以外的電源供應器充電，但請使用具有防濺設計的 Panasonic 電源供應器以確保安全。Panasonic 電源供應器不完全防水，因此請勿浸入水中。
- 本產品使用鋰離子電池。因此，即使在每次使用之後充電，電池使用壽命也不會受到影響。
- 大約在 1 小時後完成充電。充電時間可能會隨著剩餘電池容量而改變。
- 如首次為本產品充電，或超過 6 個月未有使用本產品，充電時間可能會有所分別。充電狀態指示燈可能會有數分鐘沒有亮起，繼續充電，充電狀態指示燈其後便會亮起。
- 如超過六個月未使用本產品，電池將會劣化，因此請確保最少每六個月徹底充電一次。
- 如使用不合資格的電源供應器充電，或出現 USB 電源線連接不良等問題，充電時間便可能會延長，甚至令本產品損壞。
- 完全充電之後，本產品可使用大約 60 分鐘。（溫度範圍介乎 20 °C – 30 °C，且作乾剃用途時）

  使用日數會視乎使用條件而有所分別，包括：鬍鬚厚度、在皮膚上按壓的力度，及有否使用濕剃功能。
- 使用本產品或為其充電時，如果收音機或其他電器發出噪音，請於其他位置使用本產品，於其他家用電源插座為本產品充電。

如何使用

啟動/關閉：

用手指輕觸 A 點，直至白色指示燈亮起，然後將手指由 A 點滑動至 B 點，並在 B 點停留片刻。
亦可以用手指由 B 點滑動至 A 點。

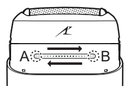

使用貼士：

1. 在 1 秒鐘內完成滑動過程。
2. 在滑動途中，請勿讓其他手指接觸到電源開關部分。
3. 戴上手套或者在手濕的情況下操作，可能會影響輕觸感應效果。

本產品附有「偵感」刀頭震動系統，可視乎鬍鬚厚度自動調節剃鬚力度。本產品會在鬍鬚濃密的部位增加剃鬚力度，而鬍鬚稀疏的部位則會減弱力度，以減少皮膚承受的負擔。

■ 濕剃時可使用以下用品：

剃鬚劑	剃鬚泡沫	√
	剃鬚啫喱	√
	剃鬚膏	×
潔面乳	潔面泡沫（不包含潔面磨砂膏）	√
	潔面泡沫（包含潔面磨砂膏）	×
	潔面皂	√
沐浴乳	液體	√
	泡沫	√

■ 如何加強剃鬚效果

- 將整塊外層網面垂直置於皮膚上，並於剃鬚時以鬍鬚生長的相反方向，慢速在面部上滑動本產品。

- 為防止外層網面損壞，請勿只使用外層網面的其中一部分剃鬚。

- 剃動下巴及喉嚨周圍的鬍鬚時，可拉開皮膚讓鬍鬚豎直，使之更易剃除。

► 註

- 建議在每次使用之後清潔本產品。
- 濕剃之後，用清水清潔機身，然後在外層網面上塗沫潤滑油。

清潔

- 關閉本產品電源，然後拔出機身上的 USB 電源線。

1 **在外層網面上塗上少量洗手液和沾上少量清水。**
啟動本產品，使其運作 10 至 20 秒，然後關閉電源。

2 **按下網面支架鬆開按鈕，以取出外層網面部分。**
（見「更換外層網面和內層刀片」。）
用自來水沖洗本產品。
- 用水沖洗後，用乾布抹走多餘水分。

3 **待本產品徹底乾透之後予以妥善存放。**
❶ 取下外層網面部分和外殼，讓機身徹底乾透。
- 將本產品置於陰涼通風處風乾，避免陽光直射。

❷ 本產品徹底乾透之後，將外層網面部分和外殼裝上機身。
- 請參閱「更換外層網面和內層刀片」及以下示意圖，以瞭解安裝及拆除部件的方法。

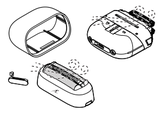

- 將外層網面部分裝上機身之後，請執行以下操作：

拆下外殼（ⓐ）：
① 握住外殼（ⓐ），用力擠壓外殼兩邊。
② 用另一隻手握住圖中所示的灰色位置，然後輕輕向上拉動。
③ 向下拉動外殼（ⓐ）。

裝上外殼（ⓐ）：
① 將電源插孔保護蓋裝上外殼（ⓐ）的凹孔上。
② 將外殼（ⓐ）裝上機身，直至聽到「咔」聲。安裝時應注意讓外殼（ⓐ）上的商標與電源開關的方向相同。

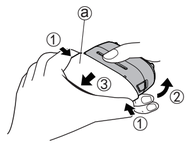

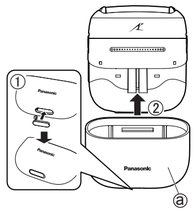

4 **潤滑本產品。**
- 為了能保持長時間舒適剃鬚，建議使用隨本產品附上的潤滑油。

❶ 將一滴潤滑油滴在外層網面上。
❷ 啟動本產品，使其運作大約 5 秒。
❸ 關閉本產品，然後用軟布抹除外層網面上的全部剩餘油分。

►註

- 排走水分時，請小心不要讓本產品撞到洗手盤或任何其他物件。否則可導致產品故障。
- 切勿使用洗手液之外的任何其他清潔劑。否則可導致產品故障。
- 切勿用天拿水、機油、酒精或其他化學物品清潔本產品。否則可導致產品破裂或褪色。外殼可使用經自來水或皂液沾濕的軟布清潔。

用清潔刷清潔

►使用長刷清潔外層網面及機身。

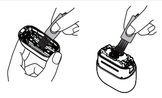

►使用短刷清潔內層刀片：將短刷往右圖 (A) 所示方向移動。
- 切勿以 (B) 方向移動短刷。否則可令內層刀片損壞，從而影響刀片的鋒利程度。
- 切勿使用短刷清潔外層網面。

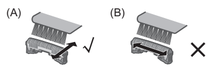

更換外層網面和內層刀片

- 建議每年更換外層網面一次，及每兩年更換內層刀片一次。

►更換零件

更換零件在經銷商或維修中心均有提供。

ES-CM3A 的更換零件	外層網面	WES9087
	內層刀片	WES9068

►外層網面部分

拆除方法

按下網面支架鬆開按鈕，以拉起並取出外層網面部分。

安裝方法

將網面支架的標記 (⌶) 轉往正面，然後將外層網面部分牢固安裝在機身上，直至聽到「咔」聲。

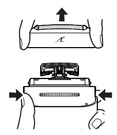

►外層網面

拆除方法

按下外層網面鬆開按鈕，並拉下外層網面。

安裝方法

將網面支架的標記 (⌶) 與外層網面的標記 (Δ) 對齊，將兩者牢固扣穩，直至聽到「咔」聲。
- 切勿過度用力按壓外層網面鬆開按鈕。

  否則可令外層網面彎曲，從而使其無法完全裝入網面支架。
- 外層網面無法以相反方向安裝。
- 將外層網面裝入機身時，請確保外層網面已插入網面支架。

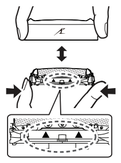

►內層刀片

拆除方法

請每次取出一塊內層刀片。
- 假如您的手部受傷，切勿接觸內層刀片的邊緣（金屬部分）。

安裝方法

每次只放入一塊刀片，直至全部固定至合適位置。

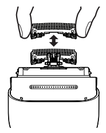

►註

切勿丟棄網面支架。

電池壽命

電池壽命約 3 年。如果在完全充電之後，運作時間也大幅縮短，就代表電池壽命已盡。（電池壽命可能會因使用及保存狀況而有所改變。）

規格

電源	5.0 V ⎓ 1.0 A 符合安全特低電壓（Safety Extra Low Voltage，SELV）系統的要求
充電時間	約 1 小時

本產品只適合家居用途。

疑難排解

問題	措施
「偵感」刀頭震動系統沒有反應。（驅動聲音沒有轉變。）	► 視乎鬍鬚的厚度或外層網面部分殘留的鬍鬚量而定，「偵感」刀頭震動系統可能不會產生反應。這種並不是故障的徵兆。
	► 視乎泡沫量或剃鬚劑的類型而定，「偵感」刀頭震動系統可能不會產生反應。這種並不是故障的徵兆。
	► 剩餘電量過低時，請為本產品充電。
	► 塗上潤滑油。（見「清潔」）
即使本產品並未接觸到皮膚，「偵感」刀頭震動系統也有反應。	► 清潔外層網面及內層刀片的上殘留的鬍鬚。（見「清潔」）
	► 外層網面或內層刀片的壽命結束時，應予更換。
本產品無法充電。	► 建議的充電環境溫度為 10 °C 至 35 °C。
	► 檢查 USB 電源線是否已穩固連接至電源供應器。假如上述措施並不適用，請拔出 USB 電源線，然後再次插入。
	► 假如 Type-C 插頭發熱，請拔出電源供應器、檢查電源插孔 [Ⓐ⑤]，並清除電源插孔上的所有水分或異物。
電源開關無法運作。	► 剃鬚劑或洗手液的泡沫可能黏附在電源開關位置。請徹底沖走泡沫，然後再操作電源開關。
充電之後，運作時間變短。	► 塗上潤滑油。
	► 電池壽命已盡。（約 3 年）
	► 每次剃鬚之後清潔本產品，可有助改善這種情況。
本產品即使在充電之後也無法運作。	► 使用本產品的建議環境溫度為不低於 5 °C。
	► 電池壽命已盡。（約 3 年）
	► 連接電源供應器後，本產品無法運作。
剃鬚期間，驅動聲音有所轉變。	► 「偵感」刀頭震動系統正在運作。視乎鬍鬚的厚度而定，驅動聲音可能會有所變動。
本產品的聲音變大。	► 塗上潤滑油。 刀片上沒有潤滑油時，刀片便無法順暢移動，並需要耗用更多電力。
	► 驅動磁浮馬達時，會聽到高音的運作聲響。這種並不是故障的徵兆。
	► 檢查確認刀片已正確安裝。
	► 用清潔刷清潔外層網面。
刀片發出異味。	► 每次剃鬚之後清潔本產品，可有助改善這種情況。
剃除的鬍鬚飛揚。	► 每次剃鬚之後清潔本產品，可有助改善這種情況。 ► 剃除的鬍鬚如黏附在內層刀片上時，請用清潔刷清潔內層刀片。
外層網面過熱。	► 塗上潤滑油。
	► 如果外層網面損壞或變形，請應予更換。（見「更換外層網面和內層刀片」。）
剃鬚效能變差。	► 每次剃鬚之後清潔本產品，可有助改善這種情況。
	► 外層網面或內層刀片的壽命結束時，應予更換。
	► 塗上潤滑油。

如果仍無法解決問題，請聯絡客戶諮詢服務中心。

取出及棄置內置可充電式電池（圖 2）

本產品有內置可充電式電池。棄置本產品前，請確保電池已經取出。
- 必須安全地丟棄電池。
- 後又只可在棄置本產品時使用，不得用於維修本產品。
- 如果您自行拆解本產品，產品就會失去防水功能，導致故障。
- 我們建議尋求經銷商或 Panasonic 授權維修中心的建議，然後再決定棄置本產品，藉以盡量延長產品的使用壽命。
- 如果您決定棄置本產品，但不想自行拆解產品取出電池，我們建議將產品送往 Panasonic 授權維修中心，藉以取出並回收電池。

► 拆下內置可充電式電池

- 請先關閉電源，然後再將電池取出。並保持啟動狀態，直至電池電量用盡。
- 按照圖中步驟 ① 至 ⑪ 的指示拆解本產品，並使用螺絲批取出電池。
- 請注意切勿讓取出電池的正負極短路。應在這些位置貼上膠紙將其絕緣。
- 如果您無法取出電池，請聯絡授權維修中心。

環保及資源回收

本產品含有鋰電池。
如果您的國家有指定認可的地點棄置電池，請確保將電池棄置於這些地方。