Panasonic

FROST-FREE REFRIGERATOR-FREEZER

INSTRUCTION MANUAL

Model No.: NR-XC541CUHS

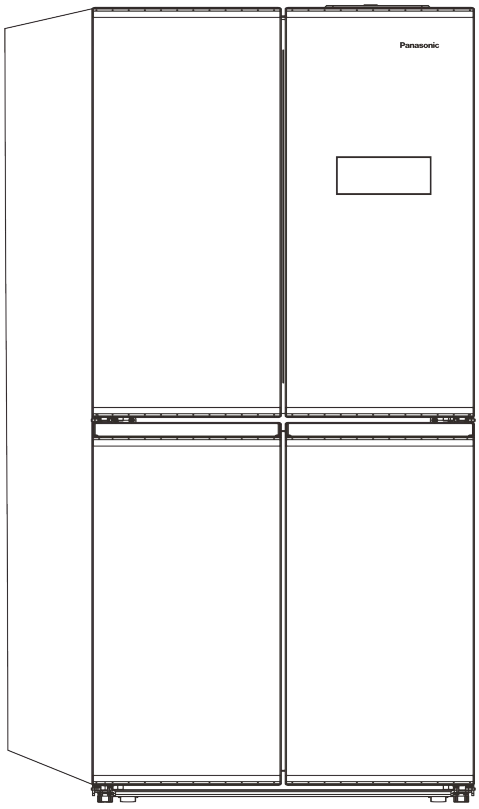

Dear users, this manual contains the product's basic knowledge, how to use it, fault diagnosis and basic troubleshooting methods. In order to better understand and use this product, please take good care of this manual and read it carefully.

Contents

I. SAFETY 3
II. Product Features 5
III. Preparations for use 5
IV. Functions 6
V. Instructions for food storage 8
VI. Tips for special needs 10
VII. Maintenance and cleaning 10
VIII. Simple fault analysis and elimination 11
IX. Certifications 12
X. Safe recovery instructions 12

SAFETY



WARNING!

It is hazardous for anyone other than authorized service personnel to carry out servicing or repairs which involves the removal of covers. To avoid the risk of an electric shock do not attempt to repair this appliance yourself.

WARNING!



Risk of fire / flammable materials.

Safety tips

Do not use electrical appliances such as a hair dryer or heater to defrost your Fridge/Freezer.

Containers with flammable gases or liquids can leak at low temperatures.

Do not store any containers with flammable materials, such as spray cans, fire extinguisher refill cartridges etc. in the Fridge/Freezer.

Do not place carbonated or fizzy drinks in the Freezer compartment. Ice lollies can cause “Frost/Freeze burns”. If consumed straight from the Fridge/Freezer.

Do not remove items from the Fridge/Freezer compartment if your hands are damp/wet, as this could cause skin abrasions or “Frost/Freezer burns”. Bottles and cans must not be placed in the Freezer compartment as they can burst when the contents freeze.

Manufacturer’s recommended storage times should be adhered to. Refer to relevant instructions.

Do not allow children to tamper with the controls or play with the Fridge/Freezer. The Fridge/Freezer is heavy. Care should be taken when moving it. It is dangerous to alter the specification or attempt to modify this product in any way.

Do not store inflammable gases or liquids inside your Fridge/Freezer.

If the power cable is damaged, it must be replaced by the manufacturer, its service agent or similarly qualified persons in order to avoid a hazard.

This refrigerating appliance is not intended to be used as a built-in appliance.

This appliance is intended to be used in household and similar applications such as
- staff kitchen areas in shops, offices and other working environments;
- farm houses and by clients in hotels, motels and other residential type environments;
- bed and breakfast type environments;
- catering and similar non-retail applications.

Keep ventilation openings, in the appliance enclosure or in the built-in structure, clear of obstruction.

Do not use mechanical devices or other means to accelerate the defrosting process, other than those recommended by the manufacturer.

Do not damage the refrigerant circuit.

Do not use electrical appliances inside the food storage compartments of the appliance, unless they are of type recommended by the manufacturer.

Do not store explosive substances such as aerosol cans with a flammable propellant inthis appliance.

This appliance is not intended for use by persons (including children) with reduced physical, sensory or mental capabilities, or lack of experience and knowledge, unless they have been given supervision or instruction concerning use of the appliance by a person responsible for their safety. Children should be supervised to ensure that they do not play with the appliance.

– WARNING: Keep ventilation openings, in the appliance enclosure or in the built-in structure, clear of obstruction.

– WARNING: Do not use mechanical devices or other means to accelerate the defrosting process, other than those recommended by the manufacturer.

– WARNING: Do not damage the refrigerant circuit.

– WARNING: Do not use electrical appliances inside the food storage compartments of the appliance, unless they are of the type recommended by the manufacturer.

– WARNING: Refrigerating appliances – in particular a refrigerator-freezer Type I – might not operate consistently (possibility of defrosting of contents or temperature becoming too warm in the frozen food compartment) when sited for an extended period of time below the cold end of the range of temperatures for which the refrigerating appliance is designed;

– WARNING: The necessity that, for doors or lids fitted with locks and keys, the keys be kept out of the reach of children and not in the vicinity of the refrigerating appliance, in order to prevent children from being locked inside.

– WARNING: The refrigerant used in your appliance and insulation materials requires special disposal procedures.

– WARNING: When positioning the appliance, ensure the supply cord is not trapped or damaged.

– WARNING: Do not locate multiple portable socket-outlets or portable power supplies at the rear of the appliance.

Children aged from 3 to 8 years are allowed to load and unload refrigerating appliances.

To avoid contamination of food, please respect the following instructions:

– Opening the door for long periods can cause a significant increase of the temperature in the compartments of the appliance.

–Clean regularly surfaces that can come in contact with food and accessible drainage systems.

–Clean water tanks if they have not been used for 48 h; flush the water system connected to a water supply if water has not been drawn for 5 days.

– Store raw meat and fish in suitable containers in the refrigerator, so that it is not in contact with or drip onto other food.

– Two-star frozen-food compartments are suitable for storing pre-frozen food, storing or making ice-cream and making ice cubes.

– One-, two- and three-star compartments are not suitable for the freezing of fresh food.

–If the refrigerating appliance is left empty for long periods, switch off, defrost, clean, dry, and leave the door open to prevent mould developing within the appliance.

Electrical Connection

WARNING

This appliance should be properly grounded for your safety. The power cord of this appliance is equipped with a three-prong plug which mates with the standard three prong wall outlets to minimize the possibility of electrical shock.
Do not, under any circumstances, cut or remove the third ground prong from the power cord supplied.

This refrigerator appliance requires a standard **220-240VAC ~50Hz/60Hz** electrical outlet with three-prong ground.

This refrigerator appliance is not designed to be used with an inverter.

The cord should be secured behind the appliance and not left exposed or dangling to prevent accidental injury.

Never unplug the refrigerator by pulling the power cord. Always grip the plug firmly and pull straight out from the receptacle.

Do not use an extension cord with this appliance. If the power cord is too short, have a qualified electrician or service technician install an outlet near the appliance. Use of an extension cord can negatively affect the performance of the unit.

Improper use of the grounded plug can result in the risk of electrical shock. If the power cord is damaged, have it replaced by an authorized service center.

Climate Range

The information about the climate range of the appliance is provided on the rating plate. It indicates at which ambient temperature (that is, room temperature, in which the appliance is working) the operation of the appliance is optimal (proper).

Climate range	Permissible ambient temperature
SN	from +10°C to +32°C
N	from +16°C to +32°C
ST	from +16°C to +38°C
T	from +16°C to +43°C

Note： Given the limit values of the ambient temperature range for the climate classes for which the refrigerating appliance is designed and the fact that the internal temperatures could be affected by such factors as location of the

refrigerating appliance, ambient temperature and the frequency of door opening, the setting of any temperature control device might have to be varied to allow for these factors, if appropriate.

Note: When operating in an environment other than the specified climate type (i.e., beyond the rated ambient temperature range), the appliance may not be able to maintain the desirable compartment temperatures.

Locks

If your Refrigerator is fitted with a lock, keep the key out of reach and not in the vicinity of the appliance to prevent children being entrapped. When disposing of an old Refrigerator, break off any old locks or latches as a safeguard.

Freon-free

The freon-free refrigerant (R600a) and the foaming insulation material (cyclopentane) that is environmentally friendly are used for the refrigerator, causing no damage to the ozone layer and having a very small impact on the global warming. R600a is flammable, and sealed in a refrigeration system, without leakage during normal use. But, in case of refrigerant leakage due to the refrigerant circuit being damaged, be sure to keep the appliance away from open flames and open the windows for ventilation as quickly as possible.

Product Features

- Total no frost design
- Multi air-flow cooling system
- Electronic temperature control
- Interior LED lighting

Parts name:

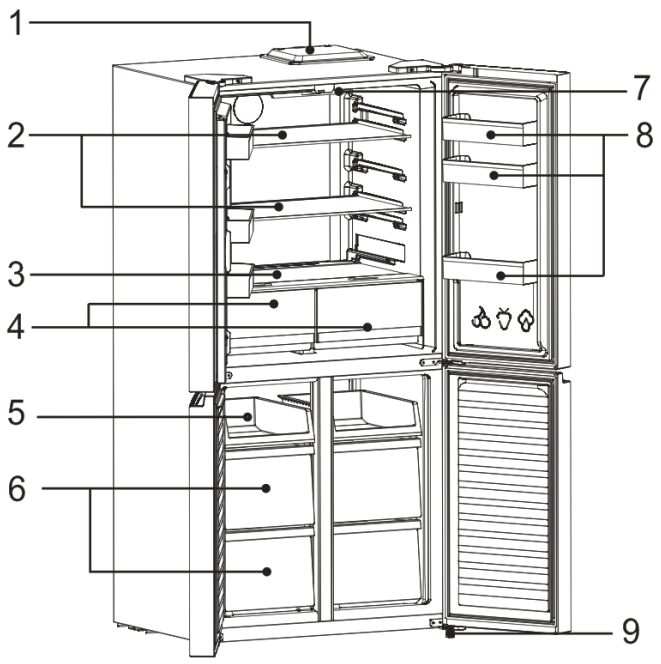

No.	Description
1	Control panel
2	Fridge shelves
3	Crisper drawer cover
4	Crisper drawers
5	Freezer trays
6	Freezer drawers
7	Head lamp
8	Door balcony
9	Adjustable feet

Due to technological innovations, the product descriptions in this manual may not be completely consistent with your refrigerator. Detailed information is in accordance with the final product.

Specifications：

Description	Refrigerator-Freezer
Model	NR-XC541CUHS
Annual energy consumption (AEC)	420 kWh/year
Freezing capacity	10kg/24h
Climate class	SN/N/ST/T

Rated voltage	220-240V
Rated frequency	50/60Hz
Rated current	1.5AMPERES
Defrosting power	230W
Refrigerant charge	R600a/80g
Rated storage volume	503L
Volume of fresh food	317L
Volume of freezer	186L
Foaming Agent	CYCLOPENTANE
Classification of protection against electric shock	Class I
Net Weight	87kg

Diagram of Circuit Principles

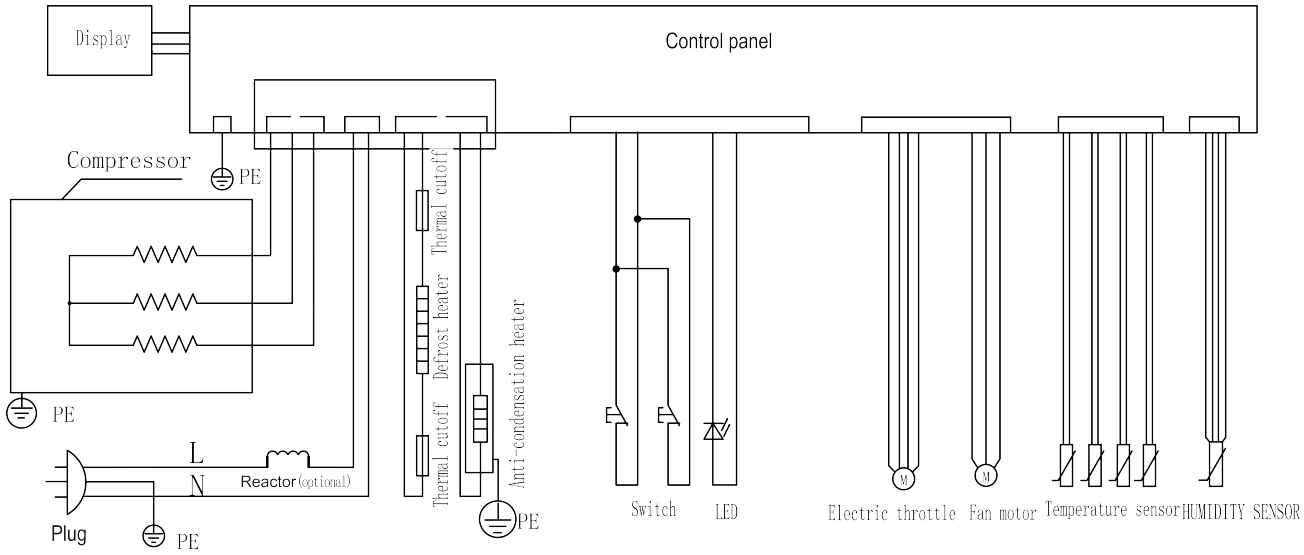

Preparations for use

Installation location:

1. Ventilation condition

The position you select for the refrigerator installation should be well-ventilated and has less hot air. Do not locate the refrigerator near a heat source such as cooker, and avoid it from direct sunlight, thus guaranteeing the refrigeration effect while saving energy consumption. Do not locate the refrigerator in the damp place, so as to prevent the refrigerator from rusting and leaking electricity. The result of the total space of the room in which the refrigerator is installed being divided by the refrigerant charge amount of the refrigerator shall not be less than 8 g/ M^3.

Note: The amount of refrigerant charged for the refrigerator can be found on the nameplate.

2. Heat dissipation space

When working, the refrigerator gives off heat to surroundings. Therefore, at least 50mm of free space should be spared at the top side, more than 50mm on both sides, and above 50mm at the back side of the refrigerator.

Dimensions in mm:

W	D	H	A	B	C(°)	E	F
853	686	1775	1310	1040	115	50	50

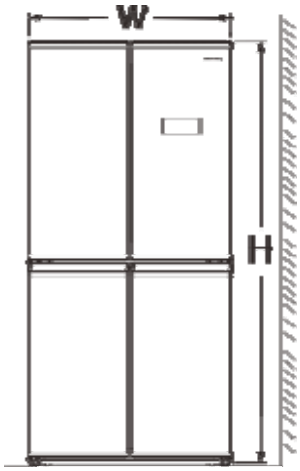

Figure1

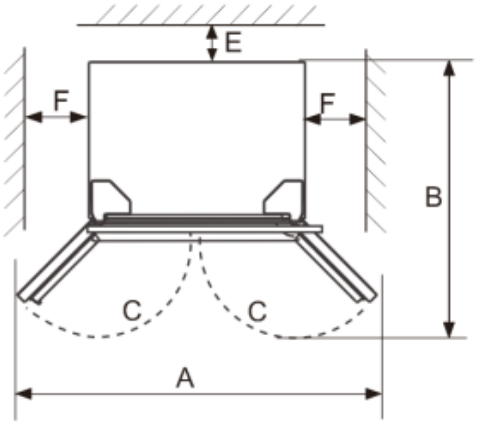

Figure2

Note：Figure 1, Figure 2 only illustrate the space demand of the product.

3. Level ground

Place the refrigerator on the solid and flat ground (floor) to keep it stable, or else, it will give rise to vibration and noise. When the refrigerator is placed on such flooring materials as carpet, straw mat, polyvinyl chloride, the solid backing plates should be applied underneath the refrigerator, to prevent color change due to heat dissipation.

⚠ Unobstructed ventilation shall be maintained around the appliance or in an embedded structure.

Preparations for use

- Standing time

After the refrigerator is properly installed and well cleaned, do not switch it on immediately. Make sure to energize the refrigerator after more than 1 hour's standing, so as to ensure its normal operation.

- Cleaning

Confirm the accessory parts inside the refrigerator and wipe the inside with a soft cloth.

- Power-on

Insert the plug into the solid socket to start the compressor. After 1 hour, open the refrigerator door, if the temperature inside the refrigerator compartment drops obviously, it indicates the refrigeration system is working normally.

- Storage of food

After the refrigerator runs for a period of time, the internal temperature of the refrigerator will be automatically controlled according to the user's temperature setting. After the refrigerator is fully cooled, put in foods, which usually need 2~3 hours to be fully cooled. In summer, when the temperature is high, it takes more than 4 hours for the foods to be fully cooled (Try to open the refrigerator door as less as possible before the internal temperature cools down).

⚠ If the refrigerator is installed in the moisture place, make sure to check whether the ground wire and leakage circuit breaker are normal. If vibration noises are produced due to the refrigerator contacting the wall or if the wall gets blackened by air convection around the compressor, move the refrigerator away from the wall. Setting up the refrigerator may cause jamming noise or image chaos to the mobile phone, fixed-line telephone, radio receiver, television surrounding it, so try to keep the refrigerator as far away as possible in such case.

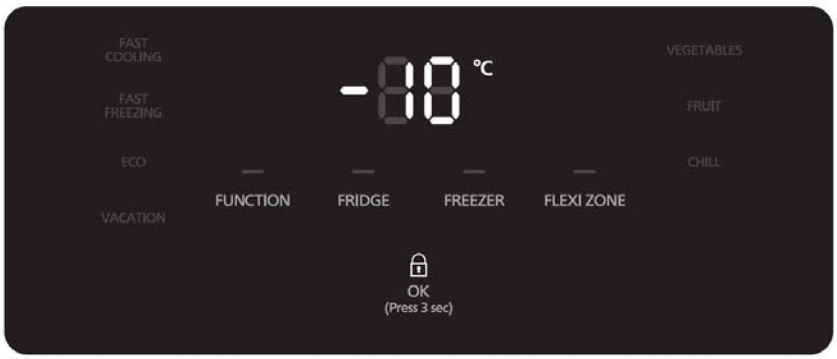

Functions

The display is designed on the fridge room door, as shown in the picture on the right:

Function Setting

- When the refrigerator system is powered on for the first time, all icons on the display panel gets illuminated for 5s.
- After the fridge door gets closed, the display will get extinguished automatically if no key operation within 15 seconds.
- When the display is off, it will light up if the fridge door is opened or any key is pressed.
- The following key operations are valid only when keys are unlocked and gets illuminated on the display.

1.1 Temperature setting

1）Fridge temperature setting

Press the “Fridge” key to adjust the fridge temperature to the expected temperature value, and then press the "OK" key within 5 seconds to validate the setting, with the flickering of the current temperature setting stopped.

The fridge temperature modes cycle as following:

“5℃→6℃→7℃→8℃→OF→2℃→3℃→4℃→5℃

‘OF’ represents the OFF state, and when the OF setting takes effect, the fridge & the FLEXI ZONE will be shut off , with the icon “℃” extinguished.

⚠ Be sure to take out all the foods in the fridge compartment & in the FLEXI ZONE before setting this function.

2）Freezer temperature setting

Press the Freezer key to adjust the freezer temperature to the expected temperature value, and then press the "OK" key within 5 seconds to validate the setting, with the flickering of the current temperature setting stopped.

The freezer temperature setting cycles as following:

-18℃→-17℃→-16℃→-24℃→-23℃→-22℃→-21℃→-20℃→-19℃→-18℃；

3）FLEXI ZONE temperature setting

Press the "FLEXI ZONE” key to adjust the temperature of the FLEXI ZONE, until the expected temperature mode is selected, and then press the "OK" key within 5 seconds to validate the setting, with the flickering of the current mode indicator stopped. The temperature modes of the FLEXI ZONE cycle as following:

Vegetables → Fruit → Chill → Vegetables.

When the fridge temperature is set to be ‘OF’, the FLEXI ZONE mode gets disabled.

Note: It is invalid to press the "FLEXI ZONE” key when the fridge temperature is set at the ‘OF’ mode.

1.2 ECO

1） When the refrigerator ECO function is enabled, the fridge temperature will be controlled at 5 ℃ and the freezer temperature at -18 ℃, which ensures that foods are stored in a better temperature range, with the refrigerator operating with better efficiency and performance.

⚠ When the ECO function is active

2）To enter “ECO”.

Press the “Function” key until the icon of ECO starts flickering, and then press the “OK” key within 5 seconds to validate the setting, with the icon of “ECO” normally On.

3）To exit “ECO”.

- When the ECO function is active, press the “Function” key until the icon of ECO gets flickering, and then press the “OK” key within 5 second to validate the setting to get the ECO function disabled, with the icon of “ECO” extinguished and the temperature of each compartment restored to that that is set before the ECO function is enabled (not in the functional state).
- When the Fast Freezing or Fast Cooling function is enabled, the ECO function gets exited automatically.

1.3 Fast cooling

1) When the Fast cooling function is enabled, the fridge temperature will be set at 2℃, with the temperature in the fresh food compartment cooling down in a fast manner. After 8 hours, the fast-cooling function will automatically exit. This function ensures that the fresh storge foods have fresh taste and maintain nutritious.

⚠ When the fast-cooling function is active

2）To enter “Fast Cooling”.

Press the “Function” key until the icon of “Fast Cooling” starts flickering, and then press the “OK” key within 5 seconds to validate the setting, with the icon of “Fast Cooling” normally On.

3）To exit “Fast Cooling”.

- After a cumulative running period of 8 hours, the fast-cooling function will exit automatically.
- When the fast-cooling function is active, press the “Function” key until the icon of “Fast Cooling” gets flickering, and then press the “OK”key within 5 seconds to validate the setting, with the icon of “Fast Cooling” extinguished and the fast-cooling function disabled.
- When the ECO function is enabled, the fast-cooling function will be disabled automatically.

1.4 Fast Freezing

1) When the Fast Freezing function is enabled, the freezer temperature will be controlled at -32℃ automatically, and after 26 hours of running, the Fast freezing function gets exited. Cooling down the freezer temperature in a rapid manner is good for the prevention against food nutrition loss and the preservation of freshness.

When the fast-freezing function is active

2) To enter “Fast Freezing”.

- Press the “Function” key until the icon of “Fast Freezing” starts flickering, and then press the “OK” key within 5 seconds to validate the setting, with the icon of “Fast Freezing” normally On.

3) To exit “Fast Freezing”.

- After a cumulative running period of 26 hours, the fast-freezing function will exit automatically.
- When the fast-freezing function is active, press the “Function” key until the icon of “Fast Freezing” gets flickering, and then press the “OK”key within 5 second to validate the setting, with the icon of “Fast Freezing” extinguished and the fast-freezing function disabled.
- When the ECO function is enabled, the fast-freezing function will be disabled automatically.

1.5 Vacation

1) When the Vacation function is enabled,. the fridge temperature will be set at 14℃

When the Vacation function is active

2) To enter “Vacation”.

- Press the “Function” key until the icon of “Vacation” starts flickering, and then press the “OK” key within 5 seconds to validate the setting, with the icon of “Vacation” normally On.

3) To exit “Vacation”.

- When the Vacation function is active, press the “Function” key until the icon of “Vacation” gets flickering, and then press the “OK”key within 5 second to validate the setting, with the icon of “Vacation” extinguished and the Vacation function disabled.
- When the ECO function is enabled, the Vacation function will be disabled automatically

1.6 Child Lock

When the Child Lock function is enabled, the temperature and function are subjected to no change to prevent maloperation.

1) In case of no key operation within 15 seconds, the Child Lock function will be enabled automatically.

2) Enabling/Exiting the Child Lock function manually

The Child Lock function can be enabled/disabled when you press and hold down the OK (3s to Unlock) key for 3s.

1.7 Door open alarm

If the fridge door is open for more than 3 minutes, buzzer alarms will be continuously issued, which can be stopped when any key is pressed, but will be restored after 3 minutes if the door keeps open. The alarms will not be lifted until the fridge door is closed.

1.8 Power cut memory

In the case of power failure, the refrigerator will maintain the running state that is set before the power outage when the power supply is restored.

1.9 Power-on delay

In order to protect the refrigerator compressor from being damaged in the case of short-time power failure (i.e., less than 5 minutes), the compressor will not be started immediately after it is powered on.

1.10 Over-temperature alarm (Only after the power outage)

When energized, if the freezer sensor temperature is higher than -10℃, its corresponding icon and temperature gets flickering. The temperature of the freezer when it is energized can be displayed by pressing any key. And the normal display is restored 10s later or by pressing any key again.

1.11 Fault alarm

In case E0, E1, E2, Eb, EH, EC, EE, etc. is displayed on the operation panel, it indicates fault with the refrigerator. Please contact the aftersales person for visiting service in such case.

Instructions for food storage

Precautions for use

- The appliance might not operate consistently (there is possibility of defrosting or temperature becoming too warm in the frozen food compartment) when sited for an extended period of time below the cold limit of the temperature range for which the refrigerating appliance is designed
- The information of climate type of the appliance is provided on the rating plate.

- The internal temperature could be affected by such factors as the location of refrigerating appliance, ambient temperature, and frequency of door open, etc., and if appropriate, a warning that setting of any temperature control device might have to be varied to allow for these factors should be made.
- Effervescent drinks should not be stored in the freezer compartment or the low-temperature compartment, and some products such as water ices should not be consumed too cold.

Food storage location

Due to the cold air circulation in the refrigerator, the temperature of each area in the refrigerator is different, so different kinds of food should be placed in different areas.

The fresh food compartment is suitable for the storage of such foods as need not to be frozen, the cooked food, beer, eggs, some condiments that need cold preservation, milk, fruit juice, etc. The crisper box is suitable for the preservation of vegetables, Fruit, etc.

The freezer compartment is suitable for the storage of ice cream, frozen food and the foods to be preserved for a long time.

Use of the fresh food compartment

Fridge shelf: When removing the shelf, lift it up first, and then pull it out; and when installing the shelf, place it into position before putting it down. Keep the shelf rear flange upward, to prevent foods from contact the liner wall. When taking out or putting in the shelf, hold it firmly, and handle with care to avoid damage.

Crisper box: Pull out the crisper box for access to food. After using or cleaning the cover plate of the crisper box, be sure to put it back onto the crisper, so that the internal temperature of the crisper box will not be affected.

Use of the crisper humidity regulating rod

The humidity regulating rod of the crisper box is design to maintain the humidity and freshness of the vegetables stored inside. When the humidity regulating rod is slide to the right, with more holes exposed, lower humidity will be kept inside the crisper box. When the humidity regulating rod is slide to the left, with less holes exposed, higher humidity will be kept inside the crisper box.

Cautions for food storage

You'd better clean the foods and wipe them dry before storing them inside the refrigerator. Before foods are put in the refrigerator, it is advisable to seal them up, so as to prevent water evaporation to keep fresh Fruit and vegetables on one hand, and prevent taint of odor on the other hand.

Do not put too many or too heavy foods inside the refrigerator. Keep enough space between foods; if too close, the cold air flow will be blocked, thus affecting the refrigeration effect. Do not store excessive or overweight foods, to avoid the shelf from being crushed. When storing the foods, keep a distance away from the inner wall; and do not place the water-rich foods too close to the fridge rear wall, lest they get frozen on the inner wall.

Categorized storage of foods：

Foods should be stored by category, with the foods you eat every day placed in front of the shelf, so that the door open duration can be shortened and food spoilage due to expiration can be avoided.

Energy-saving tips: Allow the hot food cool down to the room temperature before putting it in the refrigerator. Put the frozen food in the fresh food compartment to thaw, using the low temperature of the frozen food to cool the fresh food, thus saving energy.

Storage of Fruit and vegetables

In the case of refrigerating appliances with chill compartment, a statement to the effect that some types of fresh vegetables and Fruit are sensitive to cold and therefore are not suitable for storage in this kind of compartment should be made.

Use of the frozen food storage compartment

The freezer temperature is controlled below -18 ℃, and it is advisable to store the food for long-term preservation in the freezer compartment, but the storage duration indicated on the food packaging should be adhered to.

The freezer drawers are used to store food that needs to be frozen. Fish and meat of large block size should be cut into small pieces and packed into fresh-keeping bags before they are evenly distributed inside the freezer drawers.

★ Allow the hot foods to cool down to the room temperature before putting them in the freezer compartment.

★Do not put a glass container with liquid or the canned liquid that is sealed in the freezer compartment, so as to avoid burst due to volume expansion after the liquid gets frozen up.

★Divide the food into appropriately small portions

★You'd better pack the food up before freezing it, and the packing bag used should be dry, in case the packing bags are frozen together. Foods should be packed or covered by such suitable materials as are firm, tasteless, impervious to air and water, non-toxic and pollution-free, to avoid cross-contamination and transfer of odor.

Tips for shopping the frozen foods

1.When you are buying frozen food, look at the Storage Guidelines on the packaging. You will be able to store each item of frozen food for the period shown against the star rating. This is usually the period stated as “Best to use them before×”, found on the front of the packaging.

2.Check the temperature of the frozen food cabinet in the shop where you buy the frozen foods.

3.Make sure the frozen food package is in perfect condition.

4.Always buy frozen products last on your shopping trip or visit to the supermarket.

5.Try to keep frozen food together whilst shopping and on the journey home, as this will help to keep the food cooler.

6.Don't buy frozen food unless you can freeze it straight away. Special insulated bags can be bought from most

supermarkets and hardware shops. These keep the frozen foods cold longer.
7.For some foods, thawing before cooking is unnecessary. Vegetables and pasta can be added directly to boiling water or steam cooked. Frozen sauces and soups can be put into a saucepan and heated gently until thawed.
8.Use quality food and handle it as little as possible. When foods are frozen in small quantities, it will take less than for them to freeze up and thaw.
9.Estimate the amount of foods to be frozen up. When freezing large amounts of fresh food, adjust the temperature control knob to the low mode, with the freezer temperature lowered. So, foods can be frozen up in fast manner, with the food freshness well kept.

Tips for special needs

Moving the refrigerator/freezer

•Location

Do not place your refrigerator/freezer near a heat source, e.g., cooker, boiler, or radiator. Avoid it from direct sunlight in out-buildings or sun lounges.

•Leveling

Make sure to level your refrigerator/freezer using the front leveling feet. If not level, the refrigerator/freezer door gasket sealing performance will be affected, or even it may lead to the operating failure of your refrigerator/freezer.
After locating the refrigerator/freezer in position, wait for 4 hours before using it, so as to allow the refrigerant to settle.

•Installation

Do not cover or block the vents or grilles of your appliance.

When you are out for a long time

- If the appliance will not be used for several months, turn it off first, and then unplug the plug from the wall outlet.
- Take out all foods.
- Clean and dry the interior thoroughly. To prevent odor and mold growth, leave the door ajar: block it open or have the door removed if necessary.
- Keep the cleaned appliance in a dry, ventilated place and away from the heat source, place the appliance smoothly, and do not place heavy objects on top of it.
- The unit should not be accessible to child's play.

Maintenance and cleaning

Before cleaning, unplug the power plug first; Do not plug in or plug out the plug with wet hand, because there is a risk of electric shock and injury. Do not spill water directly on the refrigerator, to avoid rust, electricity leakage and accidents. Do not stretch your hands into the bottom of the refrigerator, since you might be scratched by sharp metal corners.

Internal cleaning and external cleaning

The food residuals in the refrigerator are liable to produce bad odor, so the refrigerator must be cleaned regularly. The fresh food compartment is usually cleaned once a month.
Remove all shelves, crisper box, bottle racks, cover board, and drawers etc., and clean them with a soft towel or sponge dipped in warm water or neutral detergent.
Clear off the dusts accumulated on the rear panel and side plates of the refrigerator often.
After using detergent, be sure to rinse it with clean water, and then wipe it dry.

Do not use bristle brush, steel wire brush, detergent, soap powder, alkaline detergent, benzene, gasoline, acid, hot water and other corrosive or soluble items to cleanse the cabinet surface, door gasket, plastic decorative parts, etc., to avoid damage.

Carefully wipe dry the door gasket, clean the groove using a wooden chopstick wrapped with cotton string. After the cleaning, fix the four corners of the door gasket first, and then embed it segment by segment into the door groove.

Interruption of power supply or failure of the refrigerating system

•Take care of the frozen foods in the event of an extended non-running of the refrigerating appliance (such as interruption of power supply or failure of the refrigerating system).

•Try to open the refrigerator door as less as possible, in this way can food safely and freshly kept for hours even in hot summer.

•If you get the power outage notice in advance：

1) Adjust the thermostat knob to the high mode an hour in advance, so that foods get fully frozen (Do not store new food during this time!). Restore the temperature mode to the original setting when power supply becomes normal in a timely manner.
2) You can also make ice with a watertight container, and put it in the upper part of the freezer, so as to extend the time for fresh food to be stored.

Note: Once the refrigerator is used, you'd better use it continuously; and under normal circumstance, do not stop its use, so as not to affect the service life.

Defrosting
This appliance is designed with automatic defrosting function, thus no need to defrost it manually.

Changing the lamp
Lamp type：LED light

The LED lamp is used by the refrigerator for lighting, which features low energy consumption and long service life. In case of any abnormality, please contact the after-sales personnel for visiting service.

Safety-check after maintenance
Is the power cord broken or damaged?
Is the power plug firmly inserted into the socket?
Is the power plug abnormally overheated?

Note: Electric shock and fire accident may be caused in case the power cord and plugs are damaged or stained by dust. If any abnormality, please unplug the power plug and get in contact with the vendor.

How to dissemble the parts

- Fridge door bottle rack:
  Hold the bottle rack with both hands, and then push it up.

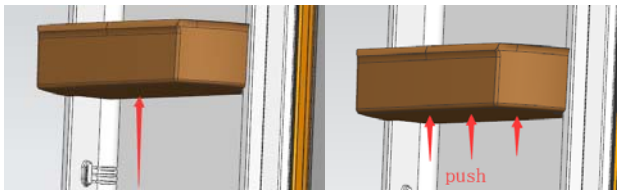

- Fridge shelf:
  Hold one end of the shelf to lift it up, and meantime pull it outward, in this way can the shelf be taken out.

Simple fault analysis and elimination

Regarding the following small faults, not every failure needs to be fixed by the technical service personnel; you can try to solve the problem.

Case	Inspection	Solutions
Completely non-refrigeration	•Is power plug off? •Are breakers and fuses broken? •No electricity or line trip?	•Re-plug •Opening the door and checking whether the lamp is lit.
Abnormal noise	•Is refrigerator stable? •Does refrigerator contact the wall?	•Adjusting refrigerator's leveling feet. •Off the wall.
Poor refrigerating efficiency	•Do you put hot food or too much food? •Do you open the door frequently? •Do you clip food bag to the door gasket? •Direct sunlight or near a furnace or stove? •Is it well-ventilated? •Temperature setting in too high?	•Putting food into refrigerator when hot food becomes cool. •Checking and closing the door. •Removing the refrigerator from the heat source. •Emptying the distance to maintain good ventilation.。 •Setting at the appropriate temperature.
Peculiar smell in refrigerator	•Any spoiled food? •Do you need to clean refrigerator? •Have you packed food of strong flavors?	•Throwing away spoiled food. •Cleaning refrigerator. •Packing food of strong flavors.
No key response	•Check whether the Child Lock function is enabled on the display panel.	•Press & hold the "OK/3s to Unlock" key for 3 seconds to unlock the key, and then conduct the key operation. (For details, refer to the Child Lock function.)
Temperature adjustment impossible.	•Check whether the function of ECO, Fast Cooling, or Fast Freezing is enabled.	•When the ECO, Fast Cooling, or Fast Freezing function is active, the temperature of the corresponding compartment is subject to no change. In such case, get the above-mentioned function disabled first before adjusting the temperature. (Refer to the Function section for details)

The set freezer temperature is displayed on the panel and the temperature digits keep flickering.	•Please check whether power failure has occurred.	•Press any key to lift the alarm (see the overtemperature alarm function for details), and be sure to check whether the fresh storage foods and frozen storage foods have spoiled.

⚠Note: If the above descriptions are inapplicable to troubleshooting, do not disassemble and repair it yourself. Repairs carried out by inexperienced persons may cause injury or serious malfunctioning. Contact the local store where your purchase was made. This product should be serviced by an authorized engineer and only genuine spare parts should be used.
When the appliance is not in use for long periods, disconnect from the electricity supply, empty all foods and clean the appliance, leaving the door ajar to prevent unpleasant smells.

Certifications

Electrical information
This electrical appliance must be grounded.
This product is equipped with a plug, which is suitable for all houses equipped with sockets meeting the current specifications
If the fitted plug is not suitable for your socket outlets, it should be cut off and carefully disposed of. To avoid a possible shock hazard, do not insert the discarded plug into a socket.
This product complies the EEC directives.

Warnings for disposal

※ Refrigerant and cyclopentane foaming material used for the refrigerator are flammable. Therefore, when the refrigerator is scrapped, it shall be kept away from any fire source and be recovered by a special recovering company with corresponding qualification other than be disposed by combustion, so as to prevent damage to the environment or any other harm.

※ When the refrigerator is scrapped, disassemble the doors, and remove gasket of door and shelves; put the doors and shelves in a proper place, to prevent trapping of any child.

Safe recovery instructions

Disposal
Old appliances still have some surplus value. An environmentally friendly approach will ensure that valuable raw materials are recycled.
The refrigerants used in your equipment and insulation materials require special handling procedures. Make sure there is no pipe damage on the back of the equipment before handling.
Up-to-date information on the options for disposing of old equipment and packaging from old equipment can be obtained from the local municipal office.

Correct Disposal of this product	
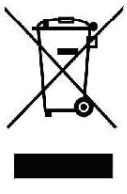	This marking indicates that this product should not be disposed with other household wastes throughout the EU. To prevent possible harm to the environment or human health from uncontrolled waste disposal, recycle it responsibly to promote the sustainable reuse of material resources. To return your used device, please use the return and collection systems or contact the retailer where the product was purchased. They can take this product for environmentally safe recycling.

Panasonic

风冷无霜冰箱

使用说明书

型号: NR-XC541CUHS

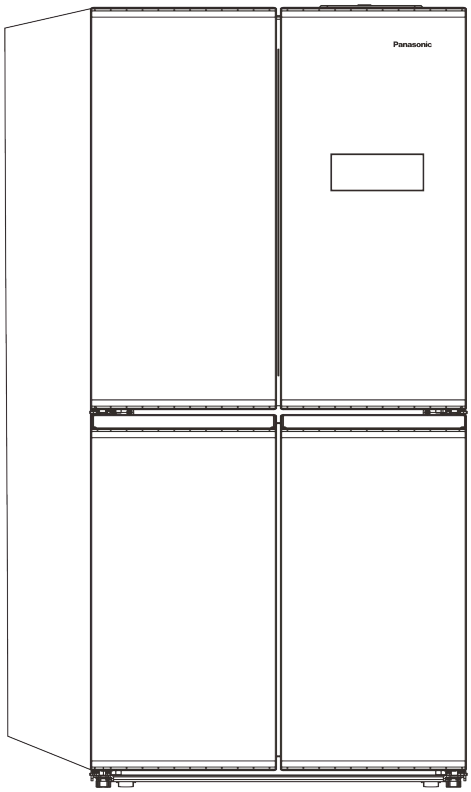

尊敬的用户，本手册包含产品的基本知识、使用方法、故障诊断和基本故障排除方法。为了更好地理解和使用本产品，请仔细阅读本手册。

目录

I. 安全 3
II. 产品特点 5
III. 使用前的准备 5
IV. 功能 6
V. 食品储存需求 8
VI. 特殊需求提示 10
VII. 维护和清洁 10
VIII. 简单故障分析与排除 11
IX. 认证 12
X. 安全回收说明 12

安全



警告!

除授权维修人员外，任何人进行涉及拆除盖子的维修或修理都是危险的。为避免触电风险，请勿自行修理此电器。

警告!



火灾/易燃材料风险。

安全提示

请勿使用吹风机或加热器等电器为冰箱除霜。
装有易燃气体或液体的容器在低温下可能会泄漏。
不要在冰箱中存放任何装有易燃材料的容器，如喷雾罐、灭火器充装筒等。
请勿将碳酸饮料放入冷冻室。如果直接从冰箱中拿出，冰棍会导致“霜/冻伤”。
如果你的手潮湿/湿润，不要从冷藏/冷冻室内取物品，因为这可能会导致皮肤擦伤或“霜/冻伤”。瓶子和罐子不得放置在冷冻室中，因为当内容物冻结时，它们可能会爆裂。
应遵守制造商建议的储存时间。请参阅相关说明。
请勿让儿童篡改控制装置或玩冰箱。冰箱很重，移动时应小心。更改规格或试图以任何方式修改此产品都是危险的。
请勿在冰箱内储存易燃气体或液体。
如果电源线损坏，必须由制造商、其服务代理或类似合规人员更换，以避免危险。
本设备不适合身体、感官或精神能力下降或缺乏经验和知识的人（包括儿童）使用，除非他们得到了负责其安全的人对设备使用的监督或指导。
此制冷设备不打算用作嵌入式电器。
该设备旨在用于家庭和类似应用，例如
• 商店、办公室和其他工作环境中的员工厨房区域；
• 农舍以及酒店、汽车旅馆和其他住宅类型环境中的客户；
• 住宿和早餐型环境；
• 餐饮和类似的非零售应用。
保持设备外壳或内置结构中的通风口无障碍物。
除制造商推荐的方法外，不要使用机械装置或其他方法来加速除霜过程。
不要损坏制冷剂回路。
不要在电器的食品储藏室内使用电器，除非它们是制造商推荐的类型。
请勿在本设备中存放含有易燃推进剂的气溶胶罐等爆炸性物质。
本设备不适合身体、感官或精神能力下降或缺乏经验和知识的人（包括儿童）使用，除非他们得到了负责其安全的人对设备使用的监督或指导。应监督儿童，确保他们不玩该电器。

- 警告： 保持设备外壳或内置结构中的通风口无障碍物。
- 警告： 除制造商建议的以外，不要使用机械装置或其他方式来加速除霜过程。
- 警告： 不要损坏制冷剂回路。
- 警告： 不要在电器的食品储藏室内使用电器，除非它们是制造商推荐的类型。
- 警告： 制冷设备 – 特别是 I 型冰箱 – 在制冷设备设计温度范围的冷端以下长时间放置时，可能无法持续运行（冷冻食品舱内的内容物可能会解冻或温度变得太热）。
- 警告： 对于装有锁和钥匙的门或盖子，钥匙必须放在儿童接触不到的地方，不要放在制冷设备附近，以防止儿童被锁在里面。
- 警告： 电器和绝缘材料中使用的制冷剂需要特殊的处理程序。
- 警告： 放置电器时，确保电源线没有被夹住或损坏。

– 警告： 请勿在电器后部放置多个便携式插座或便携式电源。为避免污染食物，请遵守以下说明：
– 长时间打开门会导致电器隔间内的温度显著升高。
–定期清洁可能与食物接触的表面和可进入的排水系统。
–如果水箱已经 48 小时未使用，请将其清洗干净；如果 5 天没有抽水，冲洗与供水系统相连的水系统。
– 将生肉和鱼储存在冰箱中合适的容器中，这样它就不会与其他食物接触或滴落在其他食物上。
– 四星冷冻室适用于储存预冻食品、储存或制作冰淇淋和制作冰块。
– 一星、二星和三星室不适合冷冻新鲜食品。
–如果制冷设备长时间空置，请关闭、除霜、清洁、干燥，并打开门，以防止设备内霉菌滋生。

电气连接

警告

为了您的安全，此设备应正确接地。该设备的电源线配有一个三叉插头，与标准的三叉壁式插座配合使用，以尽量减少触电的可能性。
在任何情况下，都不要从提供的电源线上切割或移除第三个接地叉。
这款冰箱电器需要一个标准的 220-240VAC 50/60Hz 电源插座，带有三脚接地。
这台冰箱电器不是为与逆变器一起使用而设计的。
电源线应固定在电器后面，不要暴露或悬挂，以防止意外伤害。
切勿通过拉电源线的方式拔掉冰箱电源插头。要始终牢牢握住插头，直接从插座中拔出。
请勿将延长线与此设备一起使用。如果电源线太短，请让合格的电工或维修技术人员在设备附近安装插座。使用延长线会对设备的性能产生负面影响。
接地插头使用不当可能导致触电风险。如果电源线损坏，请由授权服务中心更换.

气候范围

铭牌上提供了有关电器气候范围的信息。它指示设备在哪个环境温度（即设备工作的室温）下运行最佳（适当）。

气候范围	允许的环境温度
SN	从 +10°C 到 +32°C
N	从 +16°C 到 +32°C
ST	从 +16°C 到 +38°C
T	从 +16°C 到 +43°C

注：考虑到制冷设备设计所针对的气候等级的环境温度范围的限值，以及内部温度可能受到制冷设备位置、环境温度和开门频率等因素的影响，如果合适的话，任何温度控制装置的设置都可能需要改变以考虑这些因。

锁

如果您的冰箱装有锁，请将钥匙放在够不着的地方，不要放在电器附近，以防止儿童被困住。在处理旧冰箱时，请断开任何旧锁或闩锁作为保护措施.

无氟利昂

冰箱使用无氟利昂制冷剂（R600a）和环保的发泡绝缘材料（环戊烷），对臭氧层没有破坏，对全球变暖的影响很小。R600a 易燃，密封在制冷系统中，正常使用时无泄漏。但是，如果由于制冷剂回路损坏而导致制冷剂泄漏，请务必使设备远离明火，并尽快打开窗户通风。

产品特点

- 完全无霜设计
- 多气流冷却系统
- 电子温度控制
- 内部 LED 照明

部件名称:

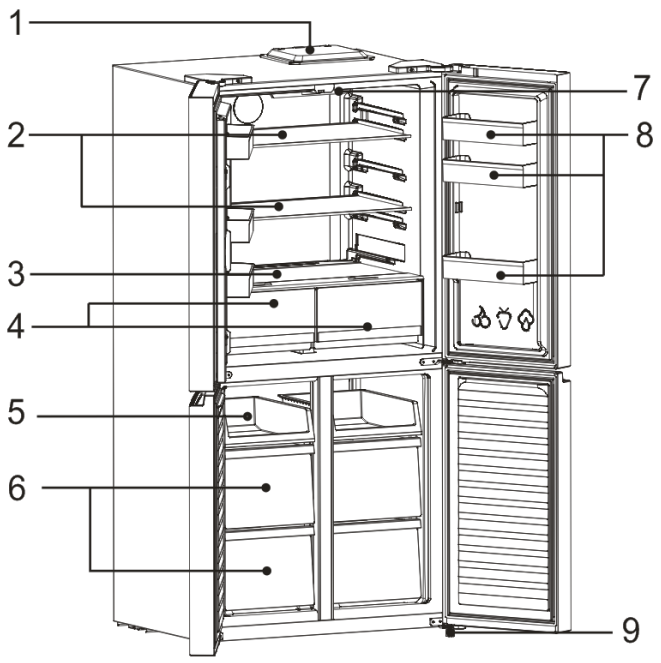

序号	描述
1	控制面板
2	冷藏搁架
3	果菜盒盖板
4	果菜盒抽屉
5	冷冻托盘
6	冷冻抽屉
7	照明灯
8	门瓶框
9	调整脚

由于技术创新，本手册中的产品描述可能与您的冰箱不完全一致。详细信息与最终产品一致.

规格：

描述	冰箱
型号	NR-XC541CUHS
年能耗 (AEC)	420 kWh/year
冷冻能力	10kg/24h
气候类型	SN/N/ST/T
额定电压	220-240V
额定评率	50/60Hz
额定电流	1.5AMPERES
除霜功率	230W
制冷剂灌注量	R600a/80g
额定储存容积	503L
冷藏容积	317L
冷冻容积	186L
发泡剂	CYCLOPENTANE
触电防护分类	Class I
净重	87kg

电路原理图

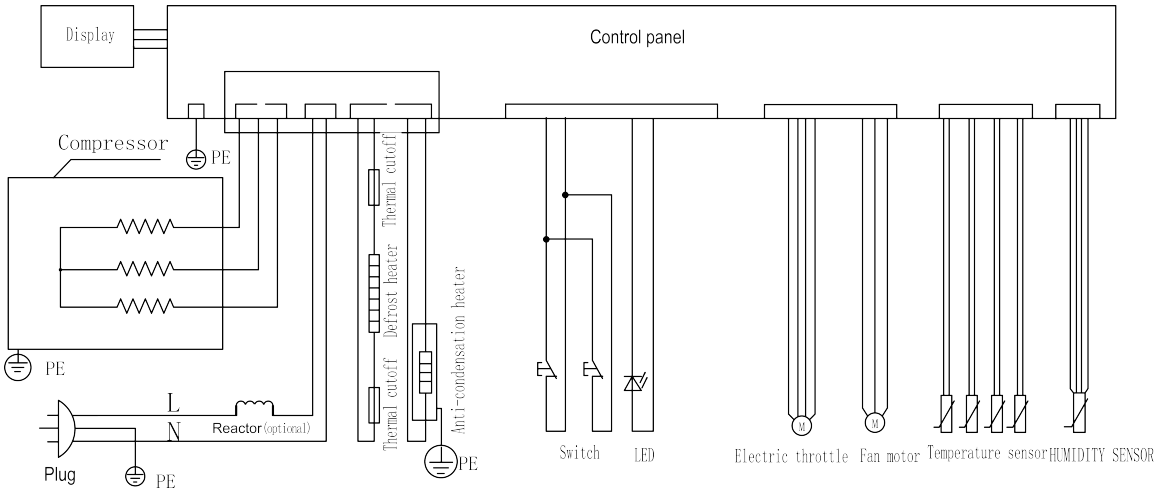

使用前的准备

安装位置:

4. 通风条件

您为冰箱安装选择的位置应通风良好，热空气较少。不要将冰箱靠近炊具、锅炉等热源，避免阳光直射，从而在保证制冷效果的同时节省能耗。不要将冰箱放在潮湿的地方，以防止冰箱生锈和漏电。安装冰箱的房间的总空间除以冰箱的制冷剂充注量的结果不得小于1m³（空间）/8g（制冷剂）。

注：冰箱加注的制冷剂量可以在铭牌上找到。

5. 散热空间

冰箱工作时，会向周围散发热量。因此，冰箱顶部应留出至少50mm的自由空间，两侧应留出50mm以上，后侧应留50mm以上。

尺寸（mm）:

W	D	H	A	B	C(°)	E	F
853	686	1775	1310	1040	115	50	50

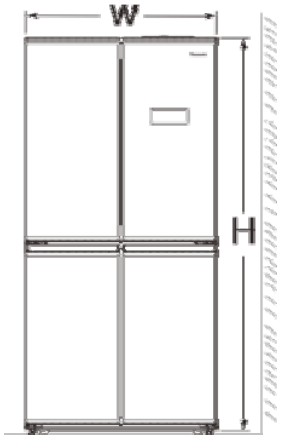

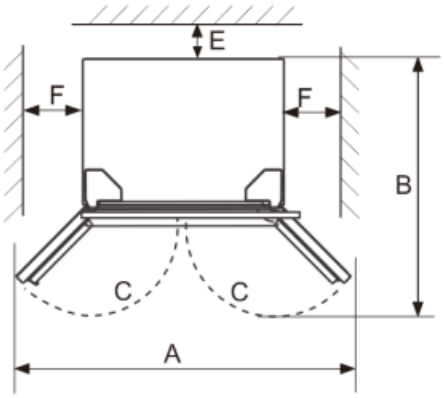

图1 图2

注：图1、图2仅作为产品空间需求尺寸示意图。

6. 水平放置

将冰箱放在坚实平坦的地面（地板）上，保持稳定，否则会产生振动和噪音。当冰箱放置在地毯、草席、聚氯乙烯等地板材

料上时，应在冰箱下方使用实心背板，以防止因散热而变色。

⚠ **设备周围或嵌入式结构内应保持畅通无阻的通风。**

使用前的准备

1. 直立时间

冰箱安装好并清洁干净后，不要立即打开。在放置1小时以上后再给冰箱通电，以确保其正常运行.

2. 清洁

确认冰箱内的配件，并用软布擦拭内部。

3. 通电

将插头插入实心插座以启动压缩机。1小时后，打开冷冻室门，如果冷冻室内的温度明显下降，则表明制冷系统正常工作。

4. 食品存储

冰箱运行一段时间后，冰箱的内部温度将根据用户的温度设置自动控制。冰箱完全冷却后，放入食物，通常需要2~3小时才能完全冷却。夏天，当温度很高时，食物需要4个多小时才能完全冷却（在内部温度冷却之前，尽量少打开冰箱门）。

⚠如果冰箱安装在潮湿的地方，一定要检查接地线和漏电断路器是否正常。如果冰箱接触墙壁会产生振动噪音，或者墙壁因压缩机周围的空气对流而变黑，请将冰箱移离墙壁。设置冰箱可能会对周围的手机、固定电话、收音机、电视机造成干扰噪音或图像混乱，因此在这种情况下，尽量远离冰箱。

功能

显示屏设计在冷藏室门上，如右图所示:

功能设置

- 当冰箱系统首次通电时，显示面板上的所有图标都会亮起5秒。
- 冰箱门关闭后，如果 15 秒内没有按键操作，显示器将自动熄灭。
- 当显示器关闭时，如果冰箱门打开或按下任何按键，它就会亮起。
- 以下按键操作仅在解锁并在显示屏上亮起时有效。

1.1 温度设定

1）冷藏温度设定

按“FRIDGE”键将冰箱温度调整到预期温度值，然后在5秒内按“OK”键验证设置，当前温度设置停止闪烁。

冷藏温度模式循环如下:

“5℃→6℃→7℃→8℃→OF→2℃→3℃→4℃→5℃

‘OF’ 表示关闭状态，当OF设置生效时，FRIDGE和FLEXI ZONE将关闭，图标“℃”熄灭。

⚠在设置此功能之前，一定要取出冷藏室和 FLEXI ZONE 的所有食物。

2）冷冻温度设置

按“FREEZER”将冷冻温度调整到预期温度值，然后在 5 秒内按“OK”键验证设置，当前温度设置停止闪烁。

冷冻温度模式循环如下:

-18℃→-17℃→-16℃→-24℃→-23℃→-22℃→-21℃→-20℃→-19℃→-18℃；

3）FLEXI ZONE 温度设置

按“FLEXI ZONE”键调整柔性区域的温度，直到选择预期的温度模式，然后在5秒内按“OK”键验证设置，当前模式指示灯停止闪烁。FLEXI ZONE 温度模式循环如下:

Vegetables → Fruit → Chill → Vegetables.

当冷藏室设置为“OF”时，FLEXI ZONE模式被禁用。

注意：当冷藏室被设置为“OF”模式时，按“FLEXI ZONE”键无效。

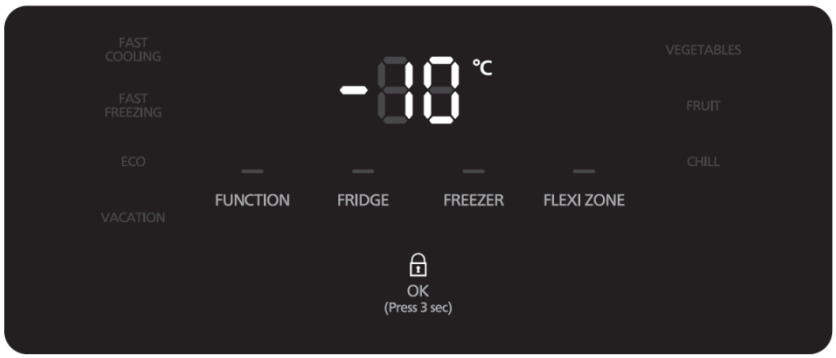

1.2 ECO

1） 当冰箱 ECO 功能启用时，冷藏温度将控制在 5℃，冷冻温度控制在-18℃，这使得食物可以储存在更好的温度范围内，冰箱以更好的效率和性能运行。

⚠ 当 ECO 功能激活时

2）进入 “ECO”.

按下“FUNCTION”键，直到 ECO 图标开始闪烁，然后在 5 秒内按下“OK”键以验证设置，“ECO”图标通常处于打开状态。

3）退出 “ECO”.

- 当 ECO 功能激活时，按“FUNCTION”键直到 ECO 图标闪烁，然后在 5 秒内按“OK”键验证设置以禁用 ECO 功能，“ECO”图标熄灭，每个室的温度恢复到启用 ECO 功能之前的设置（不在功能状态）。
- 当启用快速冷冻或快速冷却功能时，ECO 功能会自动退出。

1.3 快速冷却

1) 当启用快速冷却功能时，冷藏温度将设置为2℃，冷藏室的温度将快速冷却。8小时后，快速冷却功能将自动退出。该功能确保储存的食物味道新鲜，保持营养。

⚠ 当快速冷却功能激活时

2）进入 “Fast Cooling”.

按下“FUNCTION”键，直到“Fast Cooling”图标开始闪烁，然后在5秒内按下“OK”键以验证设置，“Fast Cooling”图标通常处于打开状态。

3）退出 “Fast Cooling”.

- 累计运行8小时后，快速冷却功能将自动退出。
- 当快速冷却功能激活时，按“FUNCTION”键，直到“Fast Cooling”图标闪烁，然后在 5 秒内按“OK”键验证设置，“Fast Cooling“图标熄灭，快速冷却功能禁用。
- 当 ECO 功能启用时，快速冷却功能将自动禁用。

1.4 快速冷冻

1) 当启用快速冷冻功能时，冷冻温度将自动控制在-32℃，运行 26 小时后，快速冷冻功能退出。快速降低冷冻温度有利于防止食物营养损失和保持新鲜度。

⚠当快速冷冻功能激活时

2) 进入 “Fast Freezing”.

- 按下“FUNCTION”键，直到“Fast Freezing”图标开始闪烁，然后在 5 秒内按下“OK”键以验证设置，“Fast Freezing”图标通常处于打开状态。

3) 退出 “Fast Freezing”.

- 累计运行 26 小时后，速冻功能将自动退出.
- 当快速冷冻功能激活时，按下“FUNCTION”键，直到“Fast Freezing”图标闪烁，然后在 5 秒内按下“OK”键以验证设置，“Fast Freezing”图标熄灭，快速冷冻功能禁用.
- 当 ECO 功能启用时，快速冷冻功能将自动禁用。

1.5 度假

1) 当启用度假功能时，冰箱的温度将设定在 14℃。

⚠当度假功能激活时

2) 进入 “Vacation”.

- 按下“FUNCTION”键，直到“Vacation”图标开始闪烁，然后在 5 秒内按下“OK”键以验证设置，“Vacation”的图标通常处于打开状态。

3) 退出 “Vacation”.

- 当度假功能激活时，按“FUNCTION”键，直到“Vacation”图标闪烁，然后在 5 秒内按“OK”键验证设置，“Vacation”按钮熄灭，度假功能禁用。
- 启用 ECO 功能后，度假功能将自动禁用。

1.6 童锁

当童锁功能启用时，温度和功能不会改变，以防止误操作。

1) 如果在 15 秒内没有按键操作，童锁功能将自动启用。

2) 手动启用/退出童锁功能

按住 OK（3s to Unlock）键 3 秒，可以启用/禁用童锁定功能。

1.7 开门报警

如果冰箱门打开超过3分钟，蜂鸣器警报将持续发出，按下任何键都可以停止，但如果门保持打开状态，蜂鸣器警报会在3分钟后恢复。在冰箱门关闭之前，警报不会解除。

1.8 断电记忆

在停电的情况下，当电源恢复时，冰箱将保持停电前设置的运行状态。

1.9 开机延迟

为了保护冰箱压缩机在短时间停电（即不到 5 分钟）的情况下免受损坏，压缩机通电后不会立即启动。

1.10 超温报警（仅在停电后）

通电时，如果冷冻传感器温度高于-10℃，其相应的图标和温度会闪烁。按下任何键都可以显示通电时的冷冻温度。10秒后或再次按下任何键，恢复正常显示。

1.11 故障报警

如果操作面板上显示 E0、E1、E2、Eb、EH、EC、EE 等，则表示冰箱存在故障。在这种情况下，请联系售后人员进行上门服务。

食品储存说明

使用注意事项

- 当设备长时间放置在低于冷藏设备设计温度范围的低温极限时，设备可能无法稳定运行（有可能解冻或冷冻室温度过高）。
- 铭牌上提供了电器的气候类型信息。
- 内部温度可能会受到制冷设备的位置、环境温度和开门频率等因素的影响，因此，在适当情况下，应提出警告，说明任何温度控制装置的设置都可能需要更改，以考虑到这些因素。
- 泡腾饮料不应存放在冷冻室或低温室，有些产品如水冰不应过冷饮用。

食品储存位置

由于冰箱内的冷空气循环，冰箱内每个区域的温度不同，因此不同种类的食物应放置在不同的区域。
冷藏室适用于存放不需要冷冻的食物、熟食、啤酒、鸡蛋、一些需要冷藏的调味品、牛奶、果汁等。
冷冻室适用于储存冰淇淋、冷冻食品和需要长时间保存的食品。

冷藏室的使用

冰箱搁架： 拆卸搁架时，先将其提起，然后再拉出；安装搁架时，先将其放好，然后再放下。(对于两节搁架，将第一节推到后端，然后拉出第二节）。保持搁板后部凸缘向上，以防食物接触内衬壁。取出或放入搁架时，应牢牢握住搁架，小心操作，以免损坏。
果菜盒： 拉出果菜盒以取出食物。使用或清洁果菜盒盖板后，请务必将其放回果菜盒上，以免影响果菜盒的内部温度。

果菜盒湿度调节杆的使用

果菜盒的湿度调节杆的设计是为了保持里面储存的蔬菜的湿度和新鲜度。当湿度调节杆向右滑动时，暴露的孔越多，果菜盒内的湿度就会越低。当湿度调节杆向左滑动时，暴露的孔越少，果菜盒内的湿度就越高。

食品储存注意事项

请将食品清洗干净并擦干后再放入冰箱。食物在放入冰箱前，最好先密封起来，这样一方面可以防止水分蒸发，保持果蔬新鲜，另一方面也可以防止异味。
冰箱内不要放置过多或过重的食物。食物之间要保持足够的空间；如果距离太近，冷空气流动会受阻，从而影响制冷效果。不要存放过多或过重的食物，以免压坏搁架。存放食物时，应与内壁保持一定距离；不要把含水量高的食物放在离冰箱后壁太近的地方，以免在内壁上结冰。

食品分类储存：

食品应分类储存，将日常食用的食品放在搁架前方，这样可以缩短开门时间，避免食品因过期而变质。
节能小贴士： 将热的食物冷却到室温后再放入冰箱。将冷冻食品放入新鲜食品格解冻，利用冷冻食品的低温冷却新鲜食品，从而节约能源。

水果和蔬菜的储存

对于带有chill室的制冷设备，应声明某些类型的新鲜蔬菜和水果对寒冷敏感，因此不适合存放在这种冷藏室中。

冷冻室的使用

冷冻室温度控制在-18℃以下，建议将食品长期储存在冷冻室中，但应遵守食品包装上标明的储存时间。
冷冻抽屉用于存放需要冷冻的食物。大块的鱼类和肉类应切成小块，装入保鲜袋中，然后均匀地放在冷冻抽屉中。
★ 将热的食物冷却至室温后再放入冷冻室。
★请勿将装有液体的玻璃容器或密封的罐装液体放入冷冻室，以免液体冷冻后因体积膨胀而爆裂。
★把食物分成适当的小份
★冷冻前请将食品包装好，使用的包装袋应干燥，以防包装袋一起冷冻。食品应用坚固、无味、不透气、不透水、无毒、无污染的适当材料包装或覆盖，以避免交叉污染和气味转移。

购买冷冻食品的贴士

1.购买冷冻食品时，请查看包装上的储存指南。每种冷冻食品的贮藏期限都应与星级相符。这通常是包装正面注明的 “最佳使用期限×”。
2.在购买冷冻食品的商店检查冷冻食品柜的温度。
3.确保冷冻食品包装完好无损。
4.在购物或逛超市时，一定要最后购买冷冻食品。
5.在购物时和回家的路上，尽量把冷冻食品放在一起，这样有助于保持食品的低温。
6.除非可以直接冷冻，否则不要购买冷冻食品。大多数超市和五金店都能买到特制的保温袋。这些袋子能让冷冻食品保持更长时间的低温。

7.有些食物在烹饪前无需解冻。蔬菜和意大利面可以直接放入沸水中煮熟或蒸熟。冷冻酱汁和汤可放入锅中轻轻加热至解冻。
8.使用优质食品，尽量少处理。少量冷冻食品的冷冻和解冻时间较短。
9.估算需要冷冻的食物数量。冷冻大量新鲜食物时，将温度控制旋钮调至低温模式，降低冷冻室温度。这样既能快速冷冻食物，又能很好地保持食物的新鲜度。

特殊需求提示

移动冰箱

•位置

不要将冰箱/冰柜放在热源附近，如灶具、锅炉或散热器。避免阳光直射。

•调平

确保使用前用调整脚将冰箱调平。如果不水平，冰箱门垫片的密封性能将受到影响，甚至可能导致冰箱的运行故障。
将冰箱放置到位后，请等待 1 小时以上再使用，以便制冷剂沉淀。

•安装

不要盖住或堵塞电器的通风口或格栅。
当你长时间外出时

•如果电器几个月不使用，请先将其关闭，然后从墙上插座拔下插头。

•把所有食物都拿出来。

•彻底清洁并干燥内部。为了防止气味和霉菌滋生，请把门半开着：必要时把门堵住或取下。

•将清洁过的电器放在干燥、通风的地方，远离热源，平稳放置电器，不要在其上放置重物。

•该装置不应让儿童玩耍。

维护与清洁

⚠清洁前，请先拔下电源插头；切勿用湿手插拔插头，否则有触电和受伤的危险。不要将水直接洒在冰箱上，以免生锈、漏电和发生意外。请勿将手伸入冰箱底部，以免被锋利的金属角划伤。

内部清洁和外部清洁

冰箱里的食物残渣容易产生难闻的气味，因此必须定期清洁冰箱。冷藏室通常每月清洁一次。
移除所有搁架、果菜盒、瓶框、盖板和抽屉等，并用蘸有温水或中性洗涤剂的软毛巾或海绵清洁。
经常清除冰箱后面板和侧板上积聚的灰尘。
使用洗涤剂后，一定要用清水冲洗，然后擦干。

⚠请勿使用鬃刷、钢丝刷、清洁剂、肥皂粉、碱性洗涤剂、苯、汽油、酸、热水等腐蚀性或可溶性物品清洁橱柜表面、门垫、塑料装饰件等，以免造成损坏。

小心擦干门垫，用缠有棉绳的木筷子清洁凹槽。清洁后，先固定门垫的四个角，然后将其逐段嵌入门槽。
电源中断或制冷系统故障
•如果制冷设备长时间不运行（如电源中断或制冷系统故障），请照顾冷冻食品。
•尽量少打开冰箱门，这样即使在炎热的夏天，食物也能安全新鲜地保存数小时。
•如果您提前收到停电通知：
1）提前一小时将温控旋钮调至高模式，以便食物完全冷冻（在此期间不要储存新食物！）。当供电正常时，及时将温度模式恢复到原来的设置。
2）您也可以用不漏水的容器制冰，并将其放在冷冻室的上部，以延长新鲜食物的储存时间。

⚠注意：冰箱一旦使用，最好连续使用，一般情况下不要停止使用，以免影响使用寿命。

除霜

本设备设计有自动除霜功能，无需手动除霜。

更换灯泡

灯泡类型：LED 灯

冰箱采用LED灯照明，能耗低，使用寿命长。如有异常，请联系售后人员上门服务。灯泡只能由制造商更换。

维修后的安全检查

电源线是否断裂或损坏？
电源插头是否牢固地插入插座？
电源插头是否异常过热？

⚠注意：如果电源线和插头损坏或沾染灰尘，可能会导致触电和火灾事故。如有任何异常，请拔下电源插头并与销售商

联系。

如何拆卸零件

- 冷藏门瓶框:
  双手握住瓶框，然后向上推。

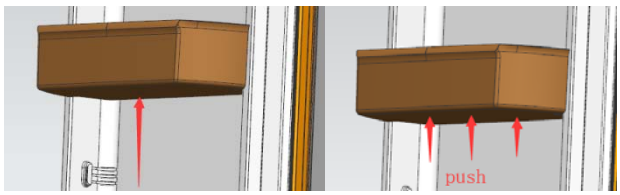

- 冷藏搁架:
  握住搁架的一端将其抬起，同时向外拉，这样搁架就可以取出了。

简单故障分析与排除

并非每个故障都需要技术服务人员进行修复，对于以下小故障，您可以尝试自己解决问题。.

案例	检查	解决方案
•完全不制冷	• 电源插头是否已拔下？ • 断路器和保险丝是否损坏？ • 没有电或线路跳闸？ • 冰箱安装在哪里？它是否放置在阳台、车库、储藏室和其他环境温度低于 10℃的地方？	• 重新插入 • 打开门，检查灯是否亮起。 • 停电还是线路跳闸？ • 将冰箱安装在受到保护且环境温度高于 10℃的地方。如果你的冰箱安装在温度太低的地方，内部冷却系统可能无法正常工作。
•异常噪音	• 冰箱平稳吗? • 冰箱碰到墙了吗?	• 调整冰箱的调节脚。 • 远离墙面。
•制冷效率低	• 放热的食物还是放太多的食物？ • 经常开门吗？ • 把食品袋夹在门封条上了吗？ • 阳光直射还是靠近炉子或火炉？ • 通风良好吗？ • 温度设置过高？	• 将热的食物冷却后再放入冰箱。 • 检查并关闭冰箱门。 • 将冰箱移离热源。 • 保持良好的通风距离。 • 设定适当的温度。
•冰箱里有怪味	• 有变质的食物吗？ • 您需要清洁冰箱吗？ • 您是否包装了味道强烈的食物？	• 扔掉变质的食物。 • 清洁冰箱。 • 包装味道浓烈的食物。
无按键响应	•检查显示面板上是否启用了童锁功能。	•长按“OK/3s to unlock”键 3 秒以解锁，然后进行按键操作。（有关详细信息，请参阅童锁功能。）
无法调节温度	•检查 ECO、快速冷却或快速冷冻功能是否启用。	•当 ECO、快速冷却或快速冷冻功能激活时，相应室的温度不会改变。在这种情况下，在调整温度之前，先禁用上述功能。（详情请参阅功能部分）
面板上显示设定的冷冻温度，且温度数字持续闪烁	•请检查是否发生电源故障。	•按任意键解除报警（详见超温报警功能），一定要检查新鲜储存食品和冷冻储存食品是否变质。

⚠注意：如果上述说明不适用于故障排除，请勿自行拆卸和修理。由没有经验的人员进行维修可能会造成伤害或严重故障。请联系当地的购买商店。本产品应由授权工程师维修，且只能使用原装零配件。
长时间不使用设备时，应切断电源，清空所有食物并清洁设备，将门敞开，以防产生异味。

认证

电气信息

本电器必须接地。

本产品配备的插头适用于所有配备符合现行规格插座的房屋。

如果所配插头不适合您的插座，则应将其剪断并小心处理。为避免可能的电击危险，请勿将废弃插头插入插座。

本产品符合 EEC 指令。

处理警告

※ 冰箱使用的制冷剂和环戊烷发泡材料是易燃的。因此，冰箱报废时，应远离火源，由具有相应资质的专门回收公司进行回收，不得焚烧处置，以防止对环境造成破坏或其他危害。

※ 冰箱报废时，拆卸门，拆下门封条和搁架；将门和搁架放在适当的地方，以防止儿童被困住。

安全回收说明

处理

旧电器仍有一定的剩余价值。环保方法将确保宝贵的原材料得到回收利用。
设备中使用的制冷剂和绝缘材料需要特殊的处理程序。处理前要确保设备背面的管道没有损坏。
有关处理旧设备和旧设备包装的最新信息，可向当地市政办公室索取。

正确处理本产品	
	该标识表明，在欧盟范围内，该产品不得与其他家庭废物一起处置。为防止不加控制的废物处理对环境或人类健康造成危害，请负责任地回收本产品，以促进材料资源的可持续再利用。如需返还使用过的设备，请使用返还和回收系统或联系购买产品的零售商。他们可以将此产品进行环保安全的回收处理。