FSV-EX MS3 Series

Cooling Only FSV-EX MS3 Series HIGH EFFICIENCY COMBINATION MODEL

Item		Unit	8	10	12	14	16	18	20	22	24
Appearance											
HP			8	10	12	14	16	18 U-18MS3H7HE	20 U-20MS3H7HE	22 U-22MS3H7HE	24 U-24MS3H7HE
Model name			U-8MS3H7	U-10MS3H7	U-12MS3H7	U-14MS3H7	U-16MS3H7	U-8MS3H7 U-10MS3H7	U-10MS3H7 U-10MS3H7	U-10MS3H7 U-12MS3H7	U-12MS3H7 U-12MS3H7
Power supply			380/400/415V/3-phase/50Hz 380/400V/3-phase/60Hz								
Capacity	Cooling	kW	22.4	28.0	33.5	40.0	45.0	50.0	56.0	61.5	68.0
		BTU/h	76,500	95,600	114,300	136,500	153,600	170,600	191,100	209,900	232,100
EER / COP	Cooling	W/W	5.30	5.03	4.10	4.56	4.13	5.15	5.05	4.49	4.07
Dimensions	H x W x D	mm	1,842 x 770 x 1,000	1,842 x 770 x 1,000	1,842 x 770 x 1,000	1,842 x 1,180 x 1,000	1,842 x 1,180 x 1,000	1,842 x 1,600 x 1,000	1,842 x 1,600 x 1,000	1,842 x 1,600 x 1,000	1,842 x 1,600 x 1,000
Net weight		kg	210	210	210	313	313	420	420	420	420
Electrical ratings	Cooling Running current	A	7.14 / 6.78 / 6.54	9.62 / 9.14 / 8.81	13.6 / 13.0 / 12.5	15.3 / 14.5 / 14.0	18.4 / 17.5 / 16.8	16.6 / 15.7 / 15.2	19.2 / 18.2 / 17.5	23. 1/ 22.0 / 21.2	27.9 / 26.5 / 25.5
	Cooling Power input	kW	4.23	5.57	8.17	8.77	10.9	9.70	11.1	13.7	16.7
Starting current		A	1	1	1	2	2	2	2	2	2
Air flow rate		m³/h	13,440	13,440	13,440	13,920	13,920	26,880	26,880	26,880	26,880
		L/s	3,733	3,733	3,733	3,867	3,867	7,467	7,467	7,467	7,467
Refrigerant amount at shipment		kg	5.6	5.6	5.6	8.3	8.3	11.2	11.2	11.2	11.2
External static pressure		Pa	80	80	80	80	80	80	80	80	80
Piping connections	Gas pipe	mm (inches)	Ø19.05 (Ø3/4)	Ø22.22 (Ø7/8)	Ø28.58 (Ø1-1/8)	Ø28.58 (Ø1-1/8)	Ø28.58 (Ø1-1/8)	Ø28.58 (Ø1-1/8)	Ø28.58 (Ø1-1/8)	Ø28.58 (Ø1-1/8)	Ø28.58 (Ø1-1/8)
	Liquid pipe	mm (inches)	Ø9.52 (Ø3/8)	Ø9.52 (Ø3/8)	Ø12.70 (Ø1/2)	Ø12.70 (Ø1/2)	Ø12.70 (Ø1/2)	Ø15.88 (Ø5/8)	Ø15.88 (Ø5/8)	Ø15.88 (Ø5/8)	Ø15.88 (Ø5/8)
	Balance pipe	mm (inches)	Ø6.35 (Ø1/4)	Ø6.35 (Ø1/4)	Ø6.35 (Ø1/4)	Ø6.35 (Ø1/4)	Ø6.35 (Ø1/4)	Ø6.35 (Ø1/4)	Ø6.35 (Ø1/4)	Ø6.35 (Ø1/4)	Ø6.35 (Ø1/4)
Ambient temperature operating range			Cooling: 10℃ (DB)~ +52℃ (DB)								
Sound pressure level	Normal mode	dB (A)	53.0	56.0	59.0	58.0	61.0	58.0	59.0	61.0	62.0
	Silent mode (2)	dB (A)	48.0	51.0	54.0	53.0	56.0	53.0	54.0	56.0	57.0
Sound power level	Normal mode	dB	74.0	77.0	80.0	79.0	82.0	79.0	80.0	82.0	83.0

Item		Unit	26	28	30	32	34	36	38	40	42	44	46	48	50	52
Appearance																
HP			26 U-26MS3H7HE	28 U-28MS3H7HE	30 U-30MS3H7HE	32 U-32MS3H7HE	34 U-34MS3H7HE	36 U-36MS3H7HE	38 U-38MS3H7HE	40 U-40MS3H7HE	42 U-42MS3H7HE	44 U-44MS3H7HE	46 U-46MS3H7HE	48 U-48MS3H7HE	50 U-50MS3H7HE	52 U-52MS3H7HE
Model name			U-10MS3H7 U-16MS3H7	U-12MS3H7 U-16MS3H7	U-14MS3H7 U-16MS3H7	U-16MS3H7 U-16MS3H7	U-10MS3H7 U-12MS3H7 U-12MS3H7	U-12MS3H7 U-12MS3H7 U-12MS3H7	U-10MS3H7 U-12MS3H7 U-16MS3H7	U-12MS3H7 U-12MS3H7 U-16MS3H7	U-10MS3H7 U-16MS3H7 U-16MS3H7	U-12MS3H7 U-16MS3H7 U-16MS3H7	U-14MS3H7 U-16MS3H7 U-16MS3H7	U-16MS3H7 U-16MS3H7 U-16MS3H7	U-10MS3H7 U-12MS3H7 U-12MS3H7 U-16MS3H7	U-12MS3H7 U-12MS3H7 U-12MS3H7 U-16MS3H7
Power supply			380/400/415V/3-phase/50Hz 380/400V/3-phase/60Hz													
Capacity	Cooling	kW	73.0	78.5	85.0	90.0	96.0	101.0	107.0	113.0	118.0	124.0	130.0	135.0	140.0	145.0
		BTU/h	249,100	267,900	290,100	307,200	327,600	344,700	365,200	385,700	402,700	423,200	443,700	460,800	477,800	494,900
EER / COP	Cooling	W/W	4.42	4.11	4.31	4.13	4.30	4.09	4.31	4.09	4.31	4.11	4.25	4.13	4.27	4.12
Dimensions	H x W x D	mm	1,842 x 2,010 x 1,000	1,842 x 2,010 x 1,000	1,842 x 2,420 x 1,000	1,842 x 2,420 x 1,000	1,842 x 2,430 x 1,000	1,842 x 2,430 x 1,000	1,842 x 2,840x 1,000	1,842 x 2,840 x 1,000	1,842 x 3,250 x 1,000	1,842 x 3,250 x 1,000	1,842 x 3,660 x 1,000	1,842 x 3,660 x 1,000	1,842 x 3,670 x 1,000	1,842 x 3,670 x 1,000
Net weight		kg	523	523	626	626	630	630	733	733	836	836	939	939	943	943
Electrical ratings	Cooling Running current	A	28.2 / 26.8 / 25.8	32.2 / 30.6 / 29.5	33.6 / 31.9 / 30.8	36.8 / 35.0 / 33.7	37.6 / 35.8 / 34.5	41.2 / 39.2 / 37.8	41.9 / 39.8 / 38.3	46.1 / 43.8 / 42.2	46.3 / 43.9 / 42.4	51.0 / 48.4 / 46.7	52.2 / 49.6 / 47.8	55.2 / 52.4 / 50.5	55.4 / 52.6 / 50.7	58.8 / 55.8 / 53.8
	Cooling Power input	kW	16.5	19.1	19.7	21.8	22.3	24.7	24.8	27.6	27.4	30.2	30.6	32.7	32.8	35.2
Starting current		A	3	3	4	4	3	3	4	4	5	5	6	6	5	5
Air flow rate		m³/h	27,360	27,360	27,840	27,840	40,320	40,320	40,800	40,800	41,280	41,280	41,760	41,760	54,240	54,240
		L/s	7,600	7,600	7,733	7,733	11,200	11,200	11,333	11,333	11,467	11,467	11,600	11,600	15,067	15,067
Refrigerant amount at shipment		kg	13.9	13.9	16.6	16.6	16.8	16.8	19.5	19.5	22.2	22.2	24.9	24.9	25.1	25.1
External static pressure		Pa	80	80	80	80	80	80	80	80	80	80	80	80	80	80
Piping connections	Gas pipe	mm (inches)	Ø34.92 (Ø1-3/8)	Ø34.92 (Ø1-3/8)	Ø34.92 (Ø1-3/8)	Ø34.92 (Ø1-3/8)	Ø34.92 (Ø1-3/8)	Ø41.28 (Ø1-5/8))	Ø41.28 (Ø1-5/8)	Ø41.28 (Ø1-5/8)	Ø41.28 (Ø1-5/8)	Ø41.28 (Ø1-5/8))	Ø41.28 (Ø1-5/8)	Ø41.28 (Ø1-5/8)	Ø41.28 (Ø1-5/8)	Ø41.28 (Ø1-5/8)
	Liquid pipe	mm (inches)	Ø19.05 (Ø3/4)	Ø19.05 (Ø3/4)	Ø19.05 (Ø3/4)	Ø19.05 (Ø3/4)	Ø19.05 (Ø3/4)	Ø19.05 (Ø3/4)	Ø19.05 (Ø3/4)	Ø19.05 (Ø3/4)	Ø19.05 (Ø3/4)	Ø19.05 (Ø3/4)	Ø19.05 (Ø3/4)	Ø19.05 (Ø3/4)	Ø19.05 (Ø3/4)	Ø19.05 (Ø3/4)
	Balance pipe	mm (inches)	Ø6.35 (Ø1/4)	Ø6.35 (Ø1/4)	Ø6.35 (Ø1/4)	Ø6.35 (Ø1/4)	Ø6.35 (Ø1/4)	Ø6.35 (Ø1/4)	Ø6.35 (Ø1/4)	Ø6.35 (Ø1/4)	Ø6.35 (Ø1/4)	Ø6.35 (Ø1/4)	Ø6.35 (Ø1/4)	Ø6.35 (Ø1/4)	Ø6.35 (Ø1/4)	Ø6.35 (Ø1/4)
Ambient temperature operating range			Cooling: 10℃ (DB)~ +52℃ (DB)													
Sound pressure level	Normal mode	dB (A)	62.0	63.0	63.0	64.0	63.0	64.0	64.0	65.0	65.0	65.0	65.0	66.0	65.0	66.0
	Silent mode (2)	dB (A)	57.0	58.0	58.0	59.0	58.0	59.0	59.0	60.0	60.0	60.0	60.0	61.0	60.0	61.0
Sound power level	Normal mode	dB	83.0	84.0	84.0	85.0	84.0	85.0	85.0	86.0	86.0	86.0	86.0	87.0	86.0	87.0

Item		Unit	54	56	58	60	62	64
Appearance								
HP			54 U-54MS3H7HE	56 U-56MS3H7HE	58 U-58MS3H7HE	60 U-60MS3H7HE	62 U-62MS3H7HE	64 U-64MS3H7HE
Model name			U-10MS3H7 U-12MS3H7 U-16MS3H7 U-16MS3H7	U-12MS3H7 U-12MS3H7 U-16MS3H7 U-16MS3H7	U-10MS3H7 U-16MS3H7 U-16MS3H7 U-16MS3H7	U-12MS3H7 U-16MS3H7 U-16MS3H7 U-16MS3H7	U-14MS3H7 U-16MS3H7 U-16MS3H7 U-16MS3H7	U-16MS3H7 U-16MS3H7 U-16MS3H7 U-16MS3H7
Power supply			380/400/415V/3-phase/50Hz 380/400/3-phase/60Hz					
Capacity	Cooling	kW	151.0	156.0	162.0	168.0	174.0	180.0
		BTU/h	515,400	532,400	552,900	573,400	593,900	614,300
EER / COP	Cooling	W/W	4.27	4.13	4.27	4.13	4.23	4.13
Dimensions	H x W x D	mm	1,842 x 4,080 x 1,000	1,842 x 4,080 x 1,000	1,842 x 4,490 x 1,000	1,842 x 4,490 x 1,000	1,842 x 4,900 x 1,000	1,842 x 4,900 x 1,000
Net weight		kg	1,046	1,046	1,149	1,149	1,252	1,252
Electrical ratings	Cooling Running current	A	59.8 / 56.8 / 54.7	63.8 / 60.6 / 58.4	64.0 / 60.8 / 58.6	68.7 / 65.3 / 62.9	70.2 / 66.7 / 64.2	73.6 / 69.9 / 67.4
	Cooling Power input	kW	35.4	37.8	37.9	40.7	41.1	43.6
Starting current		A	6	6	7	7	8	8
Air flow rate		m³/h	54,720	54,720	55,200	55,200	55,680	55,680
		L/s	15,200	15,200	15,333	15,333	15,467	15,467
Refrigerant amount at shipment		kg	27.8	27.8	30.5	30.5	33.2	33.2
External static pressure		Pa	80	80	80	80	80	80
Piping connections	Gas pipe	mm (inches)	Ø41.28 (Ø1-5/8)	Ø41.28 (Ø1-5/8)	Ø41.28 (Ø1-5/8)	Ø41.28 (Ø1-5/8)	Ø41.28 (Ø1-5/8)	Ø41.28 (Ø1-5/8)
	Liquid pipe	mm (inches)	Ø19.05 (Ø3/4)	Ø19.05 (Ø3/4)	Ø19.05 (Ø3/4)	Ø19.05 (Ø3/4)	Ø19.05 (Ø3/4)	Ø19.05 (Ø3/4)
	Balance pipe	mm (inches)	Ø6.35 (Ø1/4)	Ø6.35 (Ø1/4)	Ø6.35 (Ø1/4)	Ø6.35 (Ø1/4)	Ø6.35 (Ø1/4)	Ø6.35 (Ø1/4)
Ambient temperature operating range			Cooling: 10℃ (DB)~ +52℃ (DB)					
Sound pressure level	Normal mode	dB (A)	66.0	66.0	66.0	67.0	66.0	67.0
	Silent mode (2)	dB (A)	61.0	61.0	61.0	62.0	61.0	62.0
Sound power level	Normal mode	dB	87.0	87.0	87.0	88.0	87.0	88.0

GLOBALREMARKS

Rated conditions:	Cooling
Indoor air temperature	27℃ DB / 19℃ WB
Outdoor air temperature	35℃ DB

These specifications are subject to change without notice.

8 / 10 / 12 HP

According to the installation site, you may choose the setting position in the depth direction of the anchor bolt from A, B or C.

A: (Installation hole pitch) For removing tube forward
B: (Installation hole pitch) For removing the downward
C: (Installation hole pitch)

Top view

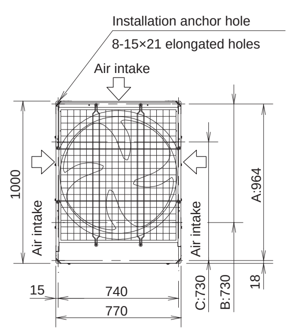

Front view

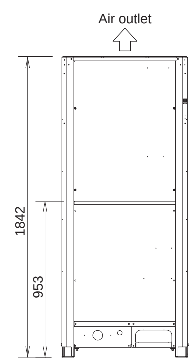

unit: mm

14 / 16 HP

According to the installation site, you may choose the setting position in the depth direction of the anchor bolt from A, B or C.

A: (Installation hole pitch) For removing tube forward
B: (Installation hole pitch) For removing the downward
C: (Installation hole pitch)

Top view

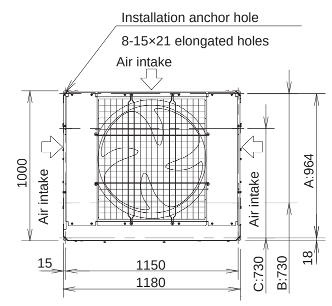

Front view

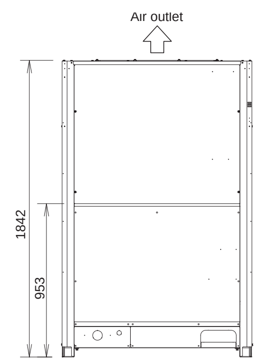

unit: mm

Cooling Only FSV-EX MS3 Series

SPACE SAVING COMBINATION MODEL

Appearance											
HP			**8**	**10**	**12**	**14**	**16**	**18**	**20**	**22**	**24**
Model name			**U-8MS3H7**	**U-10MS3H7**	**U-12MS3H7**	**U-14MS3H7**	**U-16MS3H7**	**U-18MS3H7**	**U-20MS3H7**	**U-22MS3H7**	**U-24MS3H7**
Power supply			380/400/415V/3-phase/50Hz 380/400V/3-phase/60Hz								
Capacity	Cooling	kW	22.4	28.0	33.5	40.0	45.0	50.0	56.0	61.5	68.0
		BTU/h	76,500	95,600	114,300	136,500	153,600	170,600	191,100	209,900	232,100
EER / COP	Cooling	W/W	5.30	5.03	4.10	4.56	4.13	3.68	3.76	3.60	3.42
Dimensions	H x W x D	mm	1,842 x 770 x 1,000	1,842 x 770 x 1,000	1,842 x 770 x 1,000	1,842 x 1,180 x 1,000	1,842 x 1,180 x 1,000	1,842 x 1,180 x 1,000	1,842 x 1,540 x 1,000	1,842 x 1,540 x 1,000	1,842 x 1,540 x 1,000
Net weight		kg	210	210	210	313	313	313	366	366	366
Electrical ratings	Cooling, Running current	A	7.14 / 6.78 / 6.54	9.62 / 9.14 / 8.81	13.6 / 13.0 / 12.5	15.3 / 14.5 / 14.0	18.4 / 17.5 / 16.8	23.0 / 21.8 / 21.0	24.6 / 23.4 / 22.5	28.2 / 26.8 / 25.9	32.8 / 31.2 / 30.1
	Cooling, Power input	kW	4.23	5.57	8.17	8.77	10.9	13.6	14.9	17.1	19.9
Starting current		A	1	1	1	2	2	2	2	2	2
Air flow rate		m³/h	13,440	13,440	13,440	13,920	13,920	13,920	24,300	24,300	24,300
		L/s	3,733	3,733	3,733	3,867	3,867	3,867	6,750	6,750	6,750
Refrigerant amount at shipment		kg	5.6	5.6	5.6	8.3	8.3	8.3	9.5	9.5	9.5
External static pressure		Pa	80	80	80	80	80	80	80	80	80
Piping connections	Gas pipe	mm (inches)	Ø19.05 (Ø3/4)	Ø22.22 (Ø7/8)	Ø28.58 (Ø1-1/8)	Ø28.58 (Ø1-1/8)	Ø28.58 (Ø1-1/8)	Ø28.58 (Ø1-1/8)	Ø28.58 (Ø1-1/8)	Ø28.58 (Ø1-1/8)	Ø28.58 (Ø1-1/8)
	Liquid pipe	mm (inches)	Ø9.52 (Ø3/8)	Ø9.52 (Ø3/8)	Ø12.70 (Ø1/2)	Ø12.70 (Ø1/2)	Ø12.70 (Ø1/2)	Ø15.88 (Ø5/8)	Ø15.88 (Ø5/8)	Ø15.88 (Ø5/8)	Ø15.88 (Ø5/8)
	Balance pipe	mm (inches)	Ø6.35 (Ø1/4)	Ø6.35 (Ø1/4)	Ø6.35 (Ø1/4)	Ø6.35 (Ø1/4)	Ø6.35 (Ø1/4)	Ø6.35 (Ø1/4)	Ø6.35 (Ø1/4)	Ø6.35 (Ø1/4)	Ø6.35 (Ø1/4)
Ambient temperature operating range			Cooling: 10℃ (DB)~ +52℃ (DB)								
Sound pressure level	Normal mode	dB (A)	53.0	56.0	59.0	58.0	61.0	62.0	59.0	62.0	62.0
	Silent mode (2)	dB (A)	48.0	51.0	54.0	53.0	56.0	57.0	54.0	57.0	57.0
Sound power level	Normal mode	dB	74.0	77.0	80.0	79.0	82.0	83.0	80.0	83.0	83.0

Appearance											
HP			**50**	**52**	**54**	**56**	**58**	**60**	**62**	**64**	**66**
			U-50MS3H7SP	**U-52MS3H7SP**	**U-54MS3H7SP**	**U-56MS3H7SP**	**U-58MS3H7SP**	**U-60MS3H7SP**	**U-62MS3H7SP**	**U-64MS3H7SP**	**U-66MS3H7SP**
Model name			U-8MS3H7 U-18MS3H7 U-24MS3H7	U-10MS3H7 U-18MS3H7 U-24MS3H7	U-12MS3H7 U-18MS3H7 U-24MS3H7	U-8MS3H7 U-24MS3H7 U-24MS3H7	U-10MS3H7 U-24MS3H7 U-24MS3H7	U-12MS3H7 U-24MS3H7 U-24MS3H7	U-14MS3H7 U-24MS3H7 U-24MS3H7	U-16MS3H7 U-24MS3H7 U-24MS3H7	U-18MS3H7 U-24MS3H7 U-24MS3H7
Power supply			380/400/415V/3-phase/50Hz 380/400/3-phase/60Hz								
Capacity	Cooling	kW	140.0	145.0	151.0	156.0	162.0	168.0	174.0	180.0	185.0
		BTU/h	477,800	494,900	515,400	532,400	552,900	573,400	593,900	614,300	631,400
EER / COP	Cooling	W/W	3.72	3.75	3.65	3.63	3.64	3.55	3.65	3.59	3.50
Dimensions	H x W x D	mm	1,842 x 3,610 x 1,000	1,842 x 3,610 x 1,000	1,842 x 3,610 x 1,000	1,842 x 3,970 x 1,000	1,842 x 3,970 x 1,000	1,842 x 3,970 x 1,000	1,842 x 4,380 x 1,000	1,842 x 4,380 x 1,000	1,842 x 4,380 x 1,000
Net weight		kg	889	889	889	942	942	942	1,045	1,045	1,045
Electrical ratings	Cooling, Running current	A	62.8 / 59.6 / 57.5	64.6 / 61.4 / 59.2	69.1 / 65.7 / 63.3	71.0 / 67.5 / 65.0	73.5 / 69.8 / 67.3	78.1 / 74.2 / 71.5	79.6 / 75.7 / 72.9	82.9 / 78.8 / 75.9	87.4 / 83.0 / 80.0
	Cooling, Power input	kW	37.6	38.7	41.4	43.0	44.5	47.3	47.7	50.2	52.9
Starting current		A	5	5	5	5	5	5	6	6	6
Air flow rate		m³/h	51,660	51,660	51,660	62,040	62,040	62,040	62,520	62,520	62,520
		L/s	14,350	14,350	14,350	17,233	17,233	17,233	17,367	17,367	17,367
Refrigerant amount at shipment		kg	23.4	23.4	23.4	24.6	24.6	24.6	27.3	27.3	27.3
External static pressure		Pa	80	80	80	80	80	80	80	80	80
Piping connections	Gas pipe	mm (inches)	Ø41.28 (Ø1-5/8)	Ø41.28 (Ø1-5/8)	Ø41.28 (Ø1-5/8)	Ø41.28 (Ø1-5/8)	Ø41.28 (Ø1-5/8)	Ø41.28 (Ø1-5/8)	Ø41.28 (Ø1-5/8)	Ø41.28 (Ø1-5/8)	Ø41.28 (Ø1-5/8)
	Liquid pipe	mm (inches)	Ø19.05 (Ø3/4)	Ø19.05 (Ø3/4)	Ø19.05 (Ø3/4)	Ø19.05 (Ø3/4)	Ø19.05 (Ø3/4)	Ø19.05 (Ø3/4)	Ø19.05 (Ø3/4)	Ø19.05 (Ø3/4)	Ø19.05 (Ø3/4)
	Balance pipe	mm (inches)	Ø6.35 (Ø1/4)	Ø6.35 (Ø1/4)	Ø6.35 (Ø1/4)	Ø6.35 (Ø1/4)	Ø6.35 (Ø1/4)	Ø6.35 (Ø1/4)	Ø6.35 (Ø1/4)	Ø6.35 (Ø1/4)	Ø6.35 (Ø1/4)
Ambient temperature operating range			Cooling: 10℃ (DB)~ +52℃ (DB)								
Sound pressure level	Normal mode	dB (A)	65.0	66.0	66.0	65.0	66.0	66.0	66.0	66.0	67.0
	Silent mode (2)	dB (A)	60.0	61.0	61.0	60.0	61.0	61.0	61.0	61.0	62.0
Sound power level	Normal mode	dB	86.0	87.0	87.0	86.0	87.0	87.0	87.0	87.0	88.0

U-8MS3H7
U-10MS3H7
U-12MS3H7

U-14MS3H7
U-16MS3H7
U-18MS3H7

U-20MS3H7
U-22MS3H7
U-24MS3H7

Appearance											
HP			**26**	**28**	**30**	**32**	**34**	**36**	**38**	**40**	**42**	**44**	**46**	**48**
			U-26MS3H7SP	**U-28MS3H7SP**	**U-30MS3H7SP**	**U-32MS3H7SP**	**U-34MS3H7SP**	**U-36MS3H7SP**	**U-38MS3H7SP**	**U-40MS3H7SP**	**U-42MS3H7SP**	**U-44MS3H7SP**	**U-46MS3H7SP**	**U-48MS3H7SP**
Model name			U-8MS3H7 U-18MS3H7	U-10MS3H7 U-18MS3H7	U-12MS3H7 U-18MS3H7	U-8MS3H7 U-24MS3H7	U-10MS3H7 U-24MS3H7	U-12MS3H7 U-24MS3H7	U-14MS3H7 U-24MS3H7	U-16MS3H7 U-24MS3H7	U-18MS3H7 U-24MS3H7	U-20MS3H7 U-24MS3H7	U-22MS3H7 U-24MS3H7	U-24MS3H7 U-24MS3H7
Power supply			380/400/415V/3-phase/50Hz 380/400V/3-phase/60Hz											
Capacity	Cooling	kW	73.0	78.5	85.0	90.0	96.0	101.0	107.0	113.0	118.0	124.0	130.0	135.0
		BTU/h	249,100	267,900	290,100	307,200	327,600	344,700	365,200	385,700	402,700	423,200	443,700	460,800
EER / COP	Cooling	W/W	4.03	4.05	3.79	3.75	3.76	3.63	3.78	3.67	3.52	3.56	3.49	3.44
Dimensions	H x W x D	mm	1,842 x 2,010 x 1,000	1,842 x 2,010 x 1,000	1,842 x 2,010 x 1,000	1,842 x 2,370 x 1,000	1,842 x 2,370 x 1,000	1,842 x 2,370 x 1,000	1,842 x 2,780 x 1,000	1,842 x 2,780 x 1,000	1,842 x 2,780 x 1,000	1,842 x 3,140 x 1,000	1,842 x 3,140 x 1,000	1,842 x 3,140 x 1,000
Net weight		kg	523	523	523	576	576	576	679	679	679	732	732	732
Electrical ratings	Cooling, Running current	A	30.6 / 29.0 / 28.0	33.1 / 31.5 / 30.3	37.8 / 35.9 / 34.6	39.6 / 37.7 / 36.3	42.6 / 40.4 / 39.0	45.9 / 43.6 / 42.0	47.8 / 45.4 / 43.7	51.4 / 48.9 / 47.1	55.9 / 53.1 / 51.2	57.5 / 54.6 / 52.6	61.4 / 58.4 / 56.3	64.9 / 61.7 / 59.4
	Cooling, Power input	kW	18.1	19.4	22.4	24.0	25.5	27.8	28.3	30.8	33.5	34.8	37.2	39.3
Starting current		A	3	3	3	3	3	3	4	4	4	4	4	4
Air flow rate		m³/h	27,360	27,360	27,360	37,740	37,740	37,740	38,220	38,220	38,220	48,600	48,600	48,600
		L/s	7,600	7,600	7,600	10,483	10,483	10,483	10,617	10,617	10,617	13,500	13,500	13,500
Refrigerant amount at shipment		kg	13.9	13.9	13.9	15.1	15.1	15.1	17.8	17.8	17.8	19.0	19.0	19.0
External static pressure		Pa	80	80	80	80	80	80	80	80	80	80	80	80
Piping connections	Gas pipe	mm (inches)	Ø34.92 (Ø1-3/8)	Ø34.92 (Ø1-3/8)	Ø34.92 (Ø1-3/8)	Ø34.92 (Ø1-3/8)	Ø34.92 (Ø1-3/8)	Ø41.28 (Ø1-5/8)	Ø41.28 (Ø1-5/8)	Ø41.28 (Ø1-5/8)	Ø41.28 (Ø1-5/8)	Ø41.28 (Ø1-5/8)	Ø41.28 (Ø1-5/8)	Ø41.28 (Ø1-5/8)
	Liquid pipe	mm (inches)	Ø19.05 (Ø3/4)	Ø19.05 (Ø3/4)	Ø19.05 (Ø3/4)	Ø19.05 (Ø3/4)	Ø19.05 (Ø3/4)	Ø19.05 (Ø3/4)	Ø19.05 (Ø3/4)	Ø19.05 (Ø3/4)	Ø19.05 (Ø3/4)	Ø19.05 (Ø3/4)	Ø19.05 (Ø3/4)	Ø19.05 (Ø3/4)
	Balance pipe	mm (inches)	Ø6.35 (Ø1/4)	Ø6.35 (Ø1/4)	Ø6.35 (Ø1/4)	Ø6.35 (Ø1/4)	Ø6.35 (Ø1/4)	Ø6.35 (Ø1/4)	Ø6.35 (Ø1/4)	Ø6.35 (Ø1/4)	Ø6.35 (Ø1/4)	Ø6.35 (Ø1/4)	Ø6.35 (Ø1/4)	Ø6.35 (Ø1/4)
Ambient temperature operating range			Cooling: 10℃ (DB)~ +52℃ (DB)											
Sound pressure level	Normal mode	dB (A)	63.0	63.0	64.0	63.0	63.0	64.0	63.0	65.0	65.0	64.0	65.0	65.0
	Silent mode (2)	dB (A)	58.0	58.0	59.0	58.0	58.0	59.0	58.0	60.0	60.0	59.0	60.0	60.0
Sound power level	Normal mode	dB	84.0	84.0	85.0	84.0	84.0	85.0	84.0	86.0	86.0	85.0	86.0	86.0

Appearance											
HP			**68**	**70**	**72**	**74**	**76**	**78**	**80**	**82**	**84**	**86**	**88**	**90**
			U-68MS3H7SP	**U-70MS3H7SP**	**U-72MS3H7SP**	**U-74MS3H7SP**	**U-76MS3H7SP**	**U-78MS3H7SP**	**U-80MS3H7SP**	**U-80MS3H7SP**	**U-80MS3H7SP**	**U-86MS3H7SP**	**U-88MS3H7SP**	**U-90MS3H7SP**
Model name			U-20MS3H7 U-24MS3H7 U-24MS3H7	U-22MS3H7 U-24MS3H7 U-24MS3H7	U-24MS3H7 U-24MS3H7 U-24MS3H7	U-8MS3H7 U-18MS3H7 U-24MS3H7 U-24MS3H7	U-10MS3H7 U-18MS3H7 U-24MS3H7 U-24MS3H7	U-12MS3H7 U-18MS3H7 U-24MS3H7 U-24MS3H7	U-8MS3H7 U-24MS3H7 U-24MS3H7 U-24MS3H7	U-10MS3H7 U-24MS3H7 U-24MS3H7 U-24MS3H7	U-12MS3H7 U-24MS3H7 U-24MS3H7 U-24MS3H7	U-14MS3H7 U-24MS3H7 U-24MS3H7 U-24MS3H7	U-16MS3H7 U-24MS3H7 U-24MS3H7 U-24MS3H7	U-18MS3H7 U-24MS3H7 U-24MS3H7 U-24MS3H7
Power supply			380/400/415V/3-phase/50Hz 380/400/3-phase/60Hz											
Capacity	Cooling	kW	190.0	196.0	202.0	208.0	213.0	219.0	224.0	232.0	238.0	244.0	249.0	254.0
		BTU/h	648,500	668,900	689,400	709,900	727,000	747,400	764,500	791,800	812,300	832,800	849,800	866,900
EER / COP	Cooling	W/W	3.53	3.49	3.44	3.62	3.64	3.57	3.56	3.56	3.50	3.57	3.53	3.47
Dimensions	H x W x D	mm	1,842 x 4,740 x 1,000	1,842 x 4,740 x 1,000	1,842 x 4,740 x 1,000	1,842 x 5,210 x 1,000	1,842 x 5,210 x 1,000	1,842 x 5,210 x 1,000	1,842 x 5,570 x 1,000	1,842 x 5,570 x 1,000	1,842 x 5,570 x 1,000	1,842 x 5,980 x 1,000	1,842 x 5,980 x 1,000	1,842 x 5,980 x 1,000
Net weight		kg	1,098	1,098	1,098	1,255	1,255	1,255	1,308	1,308	1,308	1,411	1,411	1,411
Electrical ratings	Cooling, Running current	A	88.8 / 84.4 / 81.4	92.8 / 88.2 / 85.0	97.1 / 92.3 / 88.9	95.8 / 91.0 / 87.8	97.7 / 92.8 / 89.4	101.2 / 96.2 / 92.7	103.9 / 98.7 / 95.1	107.7 / 102.3 / 98.6	112.3 / 106.7 / 102.8	114.2 / 108.5 / 104.6	116.4 / 110.6 / 106.6	120.9 / 114.8 / 110.7
	Cooling, Power input	kW	53.8	56.2	58.8	57.4	58.5	61.3	62.9	65.2	68.0	68.4	70.5	73.2
Starting current		A	6	6	6	7	7	7	7	7	7	8	8	8
Air flow rate		m³/h	72,900	72,900	72,900	75,960	75,960	75,960	86,340	86,340	86,340	86,820	86,820	86,820
		L/s	20,250	20,250	20,250	21,100	21,100	21,100	23,983	23,983	23,983	24,117	24,117	24,117
Refrigerant amount at shipment		kg	28.5	28.5	28.5	32.9	32.9	32.9	34.1	34.1	34.1	36.8	36.8	36.8
External static pressure		Pa	80	80	80	80	80	80	80	80	80	80	80	80
Piping connections	Gas pipe	mm (inches)	Ø41.28 (Ø1-5/8)	Ø41.28 (Ø1-5/8)	Ø53.98 (Ø2-1/8)	Ø53.98 (Ø2-1/8)	Ø53.98 (Ø2-1/8)	Ø53.98 (Ø2-1/8)	Ø53.98 (Ø2-1/8)	Ø53.98 (Ø2-1/8)	Ø53.98 (Ø2-1/8)	Ø53.98 (Ø2-1/8)	Ø53.98 (Ø2-1/8)	Ø53.98 (Ø2-1/8)
	Liquid pipe	mm (inches)	Ø22.22 (Ø7/8)	Ø22.22 (Ø7/8)	Ø22.22 (Ø7/8)	Ø22.22 (Ø7/8)	Ø22.22 (Ø7/8)	Ø22.22 (Ø7/8)	Ø22.22 (Ø7/8)	Ø22.22 (Ø7/8)	Ø22.22 (Ø7/8)	Ø22.22 (Ø7/8)	Ø22.22 (Ø7/8)	Ø22.22 (Ø7/8)
	Balance pipe	mm (inches)	Ø6.35 (Ø1/4)	Ø6.35 (Ø1/4)	Ø6.35 (Ø1/4)	Ø6.35 (Ø1/4)	Ø6.35 (Ø1/4)	Ø6.35 (Ø1/4)	Ø6.35 (Ø1/4)	Ø6.35 (Ø1/4)	Ø6.35 (Ø1/4)	Ø6.35 (Ø1/4)	Ø6.35 (Ø1/4)	Ø6.35 (Ø1/4)
Ambient temperature operating range			Cooling: 10℃ (DB)~ +52℃ (DB)											
Sound pressure level	Normal mode	dB (A)	66.0	67.0	67.0	67.0	67.0	67.0	67.0	67.0	67.0	67.0	68.0	68.0
	Silent mode (2)	dB (A)	61.0	62.0	62.0	62.0	62.0	62.0	62.0	62.0	62.0	62.0	63.0	63.0
Sound power level	Normal mode	dB	87.0	88.0	88.0	88.0	88.0	88.0	88.0	88.0	88.0	88.0	89.0	89.0

Cooling Only FSV-EX MS3 Series

Appearance					
HP			**92**	**94**	**96**
			U-92MS3H7SP	**U-94MS3H7SP**	**U-96MS3H7SP**
Model name			U-20MS3H7 U-24MS3H7 U-24MS3H7 U-24MS3H7	U-22MS3H7 U-24MS3H7 U-24MS3H7 U-24MS3H7	U-24MS3H7 U-24MS3H7 U-24MS3H7 U-24MS3H7
Power supply			380/400/415V/3-phase/50Hz 380/400/3-phase/60Hz		
Capacity	Cooling	kW	260.0	266.0	272.0
		BTU/h	887,400	907,800	928,300
EER / COP	Cooling	W/W	3.49	3.45	3.42
Dimensions	H x W x D	mm	1,842 x 6,340 x 1,000	1,842 x 6,340 x 1,000	1,842 x 6,340 x 1,000
Net weight		kg	1,464	1,464	1,464
Electrical ratings	Cooling	Running current A	123.0 / 116.9 / 112.7	127.2 / 120.8 / 116.4	131.3 / 124.7 / 120.2
		Power input kW	74.5	77.0	79.5
Starting current		A	8	8	8
Air flow rate		m^3/h	97,200	97,200	97,200
		L/s	27,000	27,000	27,000
Refrigerant amount at shipment		kg	38.0	38.0	38.0
External static pressure		Pa	80	80	80
Piping connections	Gas pipe	mm (inches)	Ø53.98 (Ø2-1/8)	Ø53.98 (Ø2-1/8)	Ø53.98 (Ø2-1/8)
	Liquid pipe	mm (inches)	Ø22.22 (Ø7/8)	Ø22.22 (Ø7/8)	Ø22.22 (Ø7/8)
	Balance pipe	mm (inches)	Ø6.35 (Ø1/4)	Ø6.35 (Ø1/4)	Ø6.35 (Ø1/4)
Ambient temperature operating range			Cooling: 10℃ (DB)~ +52℃ (DB)		
Sound pressure level	Normal mode	dB (A)	67.0	68.0	68.0
	Silent mode (2)	dB (A)	62.0	63.0	63.0
Sound power level	Normal mode	dB	88.0	89.0	89.0

GLOBALREMARKS

Rated conditions:	Cooling
Indoor air temperature	27℃ DB / 19℃ WB
Outdoor air temperature	35℃ DB

These specifications are subject to change without notice.

SPACE SAVING COMBINATION MODEL

U-8MS3H7
U-10MS3H7
U-12MS3H7

U-14MS3H7
U-16MS3H7
U-18MS3H7

U-20MS3H7
U-22MS3H7
U-24MS3H7

8 / 10 / 12 HP

According to the installation site, you may choose the setting position in the depth direction of the anchor bolt from A, B or C.

A: (Installation hole pitch) For removing tube forward
B: (Installation hole pitch) For removing the downward
C: (Installation hole pitch)

Top view

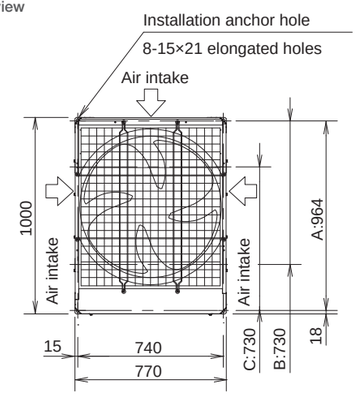

Front view

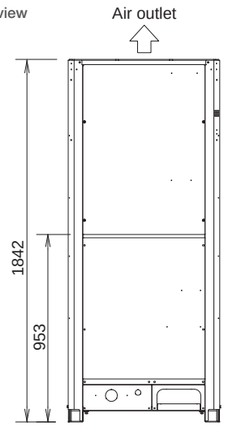

unit: mm

14 / 16 / 18 HP

According to the installation site, you may choose the setting position in the depth direction of the anchor bolt from A, B or C.

A: (Installation hole pitch) For removing tube forward
B: (Installation hole pitch) For removing the downward
C: (Installation hole pitch)

Top view

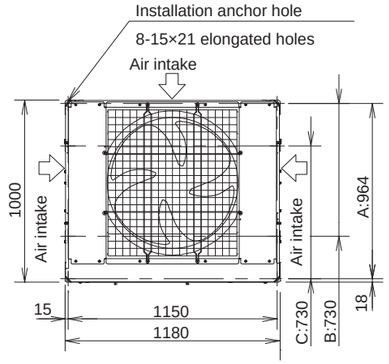

Front view

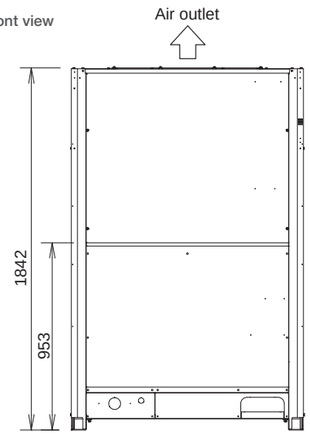

unit: mm

20 / 22 / 24 HP

According to the installation site, you may choose the setting position in the depth direction of the anchor bolt from A, B or C.

A: (Installation hole pitch) For removing tube forward
B: (Installation hole pitch) For removing the downward
C: (Installation hole pitch)

Top view

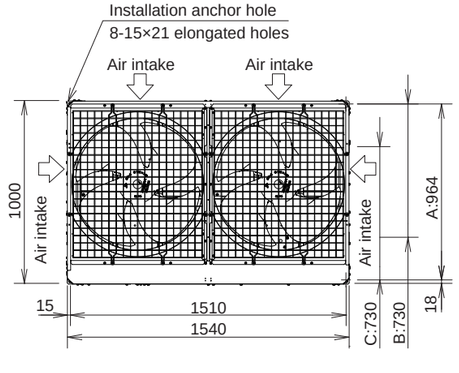

Front view

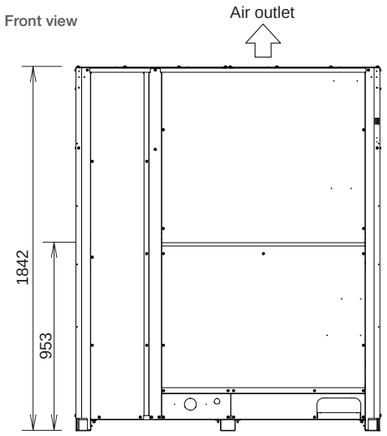

unit: mm