CEILING EXPOSED NEW Dimensions

S-18PT3T

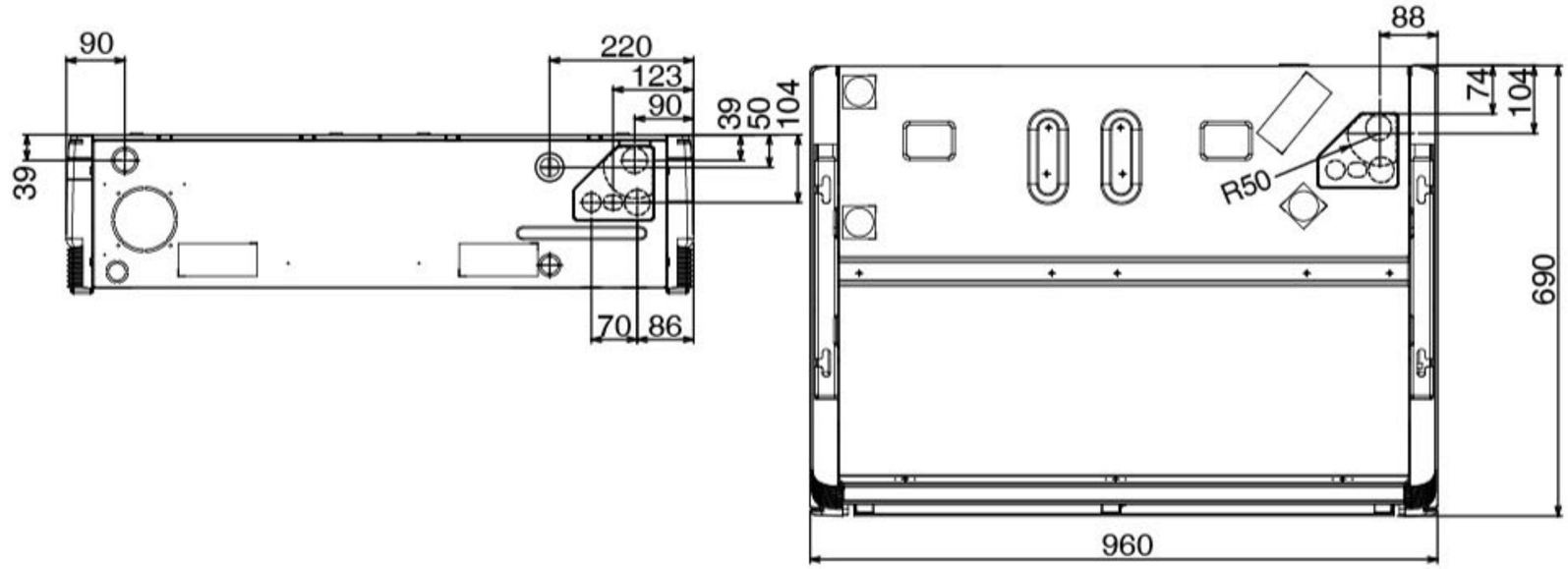

S-24PT3T

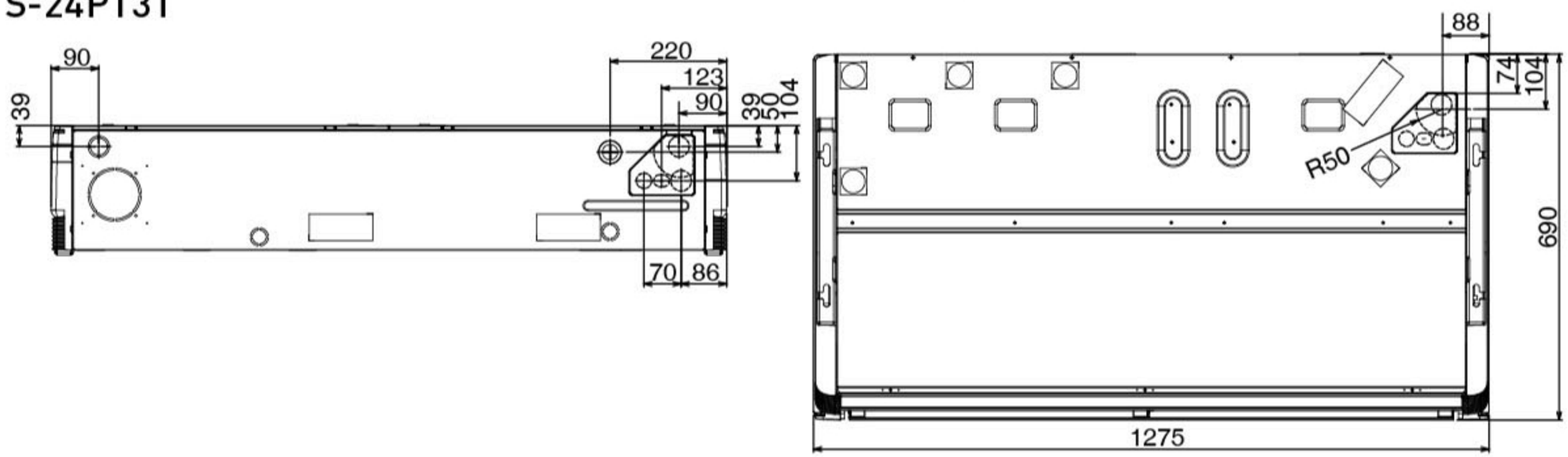

S-30PT3T/S-3648PT3T

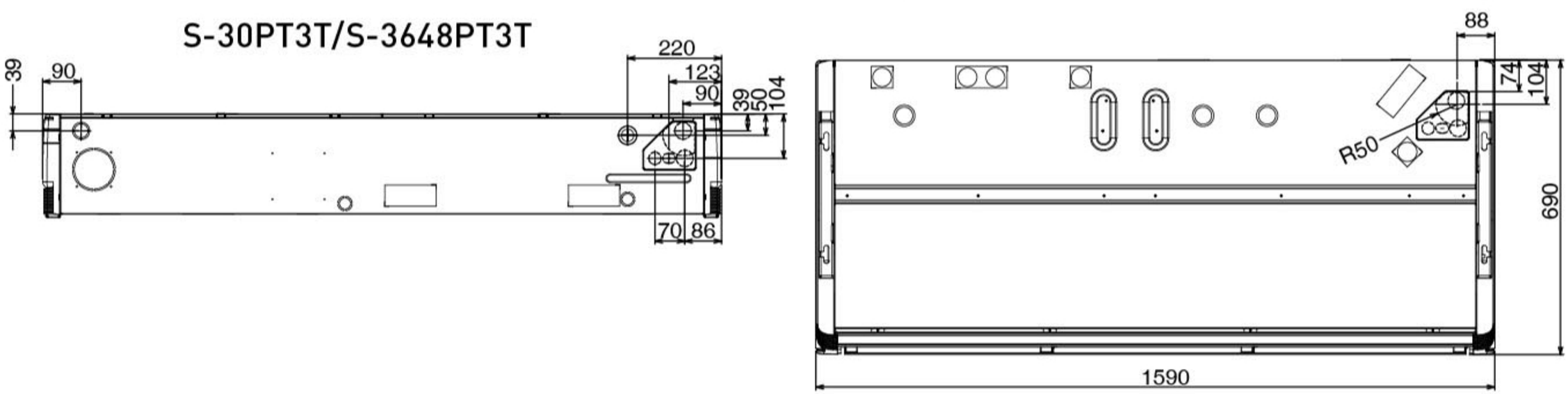

unit:mm